Fast, Accurate, Smooth Motion

Closed Loop Stepping System
EtherCAT Network

User Manual

• **Ezi-SERVOII EtherCAT 4X**

FASTECH Co., Ltd.

Contents

Contents 2

Introduction 6
Before Operation . . . 6
Safety Precautions . . . 7

1 Product Specification 10
1.1 Model Naming . . . 11
1.2 Product Dimension . . . 11
1.3 EtherCAT Specifications . . . 12
1.4 Drive Specification . . . 12

2 Installation 13
2.1 Precautions of Installation . . . 14
2.2 System Configuration . . . 15
2.3 External Wiring Diagram . . . 16
2.4 Appearance and Part Name . . . 17
2.4.1 EtherCAT Status LED . . . 18
2.4.2 EtherCAT Communication Connection . . . 19
2.4.3 I/O Connector . . . 20
2.4.4 Encoder Connection Connector . . . 21
2.4.5 Motor Connection Connector . . . 21
2.4.6 Power Connection Connector . . . 21
2.4.7 USB Connector . . . 22
2.5 Appendix . . . 22
2.5.1 Extension Cable for Motor . . . 22
2.5.2 Extension Cable for Encoder . . . 23
2.5.3 Connector Specifications . . . 23

3 EtherCAT Communication 24
3.1 CAN application protocol over EtherCAT . . . 25
3.1.1 Object Dictionary . . . 25
3.1.2 Mailbox Communication . . . 25
3.1.3 Process Data Communication . . . 26
3.2 PDO Mapping . . . 26
3.2.1 PDO Mapping . . . 26
3.2.2 PDO Assign . . . 26
3.3 EtherCAT State Machine . . . 27
3.4 Synchronization . . . 28
3.4.1 Free Run . . . 28
3.4.2 SM Event . . . 28
3.4.3 DC Sync Event . . . 28
3.5 EtherCAT Slave Information . . . 29

4 CiA402 Drive Profile 30
4.1 Drive Status Control . . . 31
4.1.1 Control word . . . 33

4.1.2 Status word . . . 33
4.2 Error Code . . . 35
4.3 Mode of operation . . . 37
4.4 Cyclic Synchronous Position Mode . . . 38
4.4.1 Definition . . . 38
4.4.2 Related Objects . . . 38
4.4.3 Control word and Status word . . . 38
4.5 Profile Position Mode . . . 40
4.5.1 Definition . . . 40
4.5.2 Related Objects . . . 40
4.5.3 Control word and Status word . . . 40
4.5.4 Position movement method . . . 42
4.6 Homing Mode . . . 47
4.6.1 Definition . . . 47
4.6.2 Relative Objects . . . 47
4.6.3 Control word and Status word . . . 47
4.6.4 Origin Search Method . . . 48
4.7 Touch Probe . . . 57
4.7.1 Definition . . . 57
4.7.2 Related Objects . . . 57
4.7.3 Touch Probe Status and Control . . . 57
4.8 Digital Input and Output . . . 59
4.8.1 Definition . . . 59
4.8.2 Related Objects . . . 59
4.8.3 ORIGIN and LIMIT Input . . . 59
4.8.4 BRAKE Output . . . 59

5 Operation 61
5.1 Operation Sequence . . . 62
5.2 Setting . . . 62
5.2.1 Installation . . . 62
5.2.2 Wiring . . . 62
5.2.3 Input Power . . . 62
5.2.4 PDO Mapping . . . 62
5.2.5 Set Communication Status . . . 63
5.3 Operation . . . 63
5.3.1 Drive Status Control . . . 63
5.3.2 Set Mode . . . 63
5.3.3 Set Operation . . . 63
5.3.4 Movement Command . . . 63
5.3.5 Check Statues . . . 63
5.4 Drive Setting Adjustment . . . 64
5.4.1 Change Rotation Direction . . . 64
5.4.2 Change I/O Signal Level . . . 64

6 EtherCAT Object Dictionary 65
6.1 Indication Type of Objects . . . 66
6.1.1 Index and Sub-Index . . . 66
6.1.2 Name . . . 66
6.1.3 Data Type . . . 66
6.1.4 Access . . . 67
6.1.5 SAVE . . . 67
6.1.6 PDO Mapping . . . 67
6.1.7 Constant Value . . . 67
6.1.8 Value Range . . . 67
6.1.9 Default Value . . . 67
6.2 Communication Object . . . 68
6.2.1 Object 1000h: Device type . . . 68

6.2.2 Object 1001h: Error register . . . 68
6.2.3 Object 1008h: Device name . . . 68
6.2.4 Object 1009h: Hardware version . . . 68
6.2.5 Object 100Ah: Software version . . . 69
6.2.6 Object 1010h: Store parameters . . . 69
6.2.7 Object 1011h: Restore default parameters . . . 69
6.2.8 Object 1018h: Identity . . . 70
6.2.9 Object 10F1h: Error settings . . . 70
6.2.10 Object 10F3h: Diagnosis history . . . 71
6.3 PDO Mapping Object . . . 73
6.3.1 Object 1600h: RxPDO-Map 0 . . . 73
6.3.2 Object 1601h: RxPDO-Map 1 . . . 73
6.3.3 Object 1A00h: TxPDO-Map 0 . . . 73
6.3.4 Object 1A01h: TxPDO-Map 1 . . . 74
6.3.5 Object 1C12h: RxPDO assign . . . 74
6.3.6 Object 1C13h: TxPDO assign . . . 74
6.4 Sync Manager Object . . . 75
6.4.1 Object 1C00h: Sync manager type . . . 75
6.4.2 Object 1C32h: SM output parameter . . . 75
6.4.3 Object 1C33h: SM input parameter . . . 76
6.5 Drive Profile Object . . . 78
6.5.1 Object 603Fh: Error code . . . 78
6.5.2 Object 6040h: Control word . . . 78
6.5.3 Object 6041h: Status word . . . 78
6.5.4 Object 605Ah: Quick stop option code . . . 78
6.5.5 Object 605Bh: Shutdown option code . . . 79
6.5.6 Object 605Ch: Disable operation option code . . . 79
6.5.7 Object 605Dh: Halt option code . . . 79
6.5.8 Object 605Eh: Fault reaction option code . . . 80
6.5.9 Object 6060h: Mode of operation . . . 80
6.5.10 Object 6061h: Mode of operation display . . . 80
6.5.11 Object 6062h: Position demand value . . . 80
6.5.12 Object 6064h: Position actual value . . . 81
6.5.13 Object 6065h: Following error window . . . 81
6.5.14 Object 6067h: Position window . . . 81
6.5.15 Object 606Bh: Velocity demand value . . . 81
6.5.16 Object 606Ch: Velocity actual value . . . 82
6.5.17 Object 607Ah: Target position . . . 82
6.5.18 Object 607Ch: Home offset . . . 82
6.5.19 Object 607Dh: Software position limit . . . 82
6.5.20 Object 607Eh: Polarity . . . 83
6.5.21 Object 607Fh: Max profile velocity . . . 83
6.5.22 Object 6081h: Profile velocity . . . 83
6.5.23 Object 6083h: Profile acceleration . . . 83
6.5.24 Object 6084h: Profile deceleration . . . 84
6.5.25 Object 6098h: Homing method . . . 84
6.5.26 Object 6099h: Homing speeds . . . 85
6.5.27 Object 609Ah: Homing acceleration . . . 85
6.5.28 Object 60B8h: Touch probe function . . . 85
6.5.29 Object 60B9h: Touch probe status . . . 86
6.5.30 Object 60BAh: Touch probe 1 positive value . . . 87
6.5.31 Object 60BBh: Touch probe 1 negative value . . . 87
6.5.32 Object 60BCh: Touch probe 2 positive value . . . 87
6.5.33 Object 60BDh: Touch probe 2 negative value . . . 87
6.5.34 Object 60C2h: Interpolation time period . . . 88
6.5.35 Object 60D0h: Touch probe source . . . 88
6.5.36 Object 60D5h: Touch probe 1 positive edge counter . . . 88
6.5.37 Object 60D6h: Touch probe 1 negative edge counter . . . 88

6.5.38 Object 60D7h: Touch probe 2 positive edge counter . . . 89
6.5.39 Object 60D8h: Touch probe 2 negative edge counter . . . 89
6.5.40 Object 60E3h: Supported homing methods . . . 89
6.5.41 Object 60F4h: Following error actual value . . . 90
6.5.42 Object 60FDh: Digital inputs . . . 90
6.5.43 Object 60FEh: Digital outputs . . . 90
6.5.44 Object 6502h: Supported drive modes . . . 91
6.6 Manufacture specific Object . . . 92
6.6.1 Object 2001h: Sensors logics . . . 92
6.6.2 Object 2002h: Reverse limit direction . . . 92
6.6.3 Object 2003h: Limit stop method . . . 93
6.6.4 Object 2005h: Encoder resolution . . . 93
6.6.5 Object 2006h: Start speed . . . 93
6.6.6 Object 2007h: Run current . . . 93
6.6.7 Object 2008h: Boost current . . . 94
6.6.8 Object 2009h: Stop current . . . 95
6.6.9 Object 200Ah: Motor number . . . 95
6.6.10 Object 200Ch: Reference resolution . . . 95
6.6.11 Object 200Dh: Position control gain . . . 96
6.6.12 Object 200Eh: In-position mode . . . 97
6.6.13 Object 200Fh: Encoder filter time . . . 97
6.6.14 Object 2010h: Brake delay . . . 98
6.6.15 Object 2014h: Homing Torque Ratio . . . 98
6.6.16 Object 2018h: Internal Current Value . . . 98
6.6.17 Object 201Ah: Push Mode . . . 98
6.6.18 Object 201Bh: Limit Deceleration . . . 99
6.6.19 Object 2020h: Error code history setting . . . 99
6.6.20 Object 2021h: Error code history . . . 100
6.6.21 Object 2025h: Lifetime Record . . . 101
6.6.22 Object 2030h: Advanced settings . . . 102
6.6.23 Object 2031h: Encoder count error . . . 103

Changelog **105**

Introduction

Before Operation

- Thank you for your purchasing Ezi-SERVOII EtherCAT 4X.
- 32 Bit high-performance of ARM Processor on-board Ezi-SERVOII EtherCAT 4X is motion controller supports Field-network EtherCAT.
- This manual describes handling, safety instruction, diagnosis and troubleshooting of Ezi-SERVOII EtherCAT 4X.
- Before operating Ezi-SERVOII EtherCAT 4X, thoroughly read this manual.
- After reading the manual, keep the manual near the product so that any user can read the manual whenever needed.

Safety Precautions

General Precautions

- Contents of this manual are subject to change without prior notice for functional improvement, change of specifications or user's better understanding.
- When the manual is damaged or lost, please contact with Fastech's agents or our company to get a manual again.
- It is not responsible for Fastech to guarantee product randomly reconstructed because this kind of improper action is out of range of guarantee.

Safety Precautions

Before installation, operation and repairing, thoroughly read the manual and fully understand the contents. Also before operation, please understand the mechanical characteristics of the product and related safety information and precautions.
User manual describes level of precaution for safety as Warning and Danger.

Warning

If user does not properly handle the product, the user may seriously or slightly injured and damages may occur in the machine.

Danger

If user does not properly handle the product, a dangerous situation (such as an electric shock) may occur resulting in deaths or serious injuries.

Information

Necessary Information and extra attentions for operation.

Although precaution is only a **Warning**, a serious result could be caused depending on the situation.

Check the product

Warning

Check the product is damaged or parts are missing. Otherwise, the machine may get damaged or the user may get injured.

Installation

Warning

Carefully operate the product. Otherwise the product may get damaged or user's foot may get injured by dropping the product.
Use non-flammable materials such as metal in the place where the product is to be installed. Otherwise, a fire may occur.
When installing several units of FASTECH Co., Ltd.'s products in a sealed place, install a cooling fan to keep the ambient temperature as 50°C or lower. Otherwise a fire or other kinds of accidents may occur due to overheating.

Danger

The process of installation, Connection, Operation, Checking and Repairing should be done with qualified person.

Connect Cables

Warning

Keep the rated range of input voltage of the drive. Otherwise, a fire or other kinds of accidents may occur.
Please follow the wiring diagram for cable connection. Otherwise, a fire or other kinds of accidents may occur.

Danger

Before connecting cables, please check if input power is OFF. Otherwise, a fire or other kinds of accidents may occur.
The case of Ezi-SERVOII EtherCAT 4X is insulated from the ground of the internal circuit by the condenser so please ground the product. Otherwise, an electric shock or a fire may occur.

Operation and Setting

Warning

If a protection function (alarm) occurs, firstly remove its cause and then release (alarm reset) the protection function. If you operate continuously without removal of root cause, the machine may get damaged or the user may get injured.
Make all input signals to OFF before supply input voltage to drive. Motor will run then the machine may get damaged or the user may get injured.
All parameter values of Ezi-SERVOII EtherCAT 4X are set by default factory setting value. Change this value after reading this manual thoroughly. Otherwise, the machine may get damaged or other kinds of accidents may occur.

Check and Repair

Danger

Stop to supply power to main circuit and wait for a while before checking or repairing the Ezi-SERVOII EtherCAT 4X. Electricity remains in the capacitor may cause danger as like electric shock.
Do not change cabling while power is being supplied. Otherwise, the user may get injured or the product may get damaged.
Do not reconstruct the product. Otherwise, an electric shock may occur or the reconstructed product can not get After Sales Service.

Chapter 1

Product Specification

1.1 Model Naming

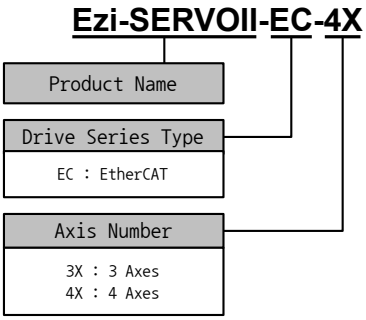

Figure 1.1: Model Naming

1.2 Product Dimension

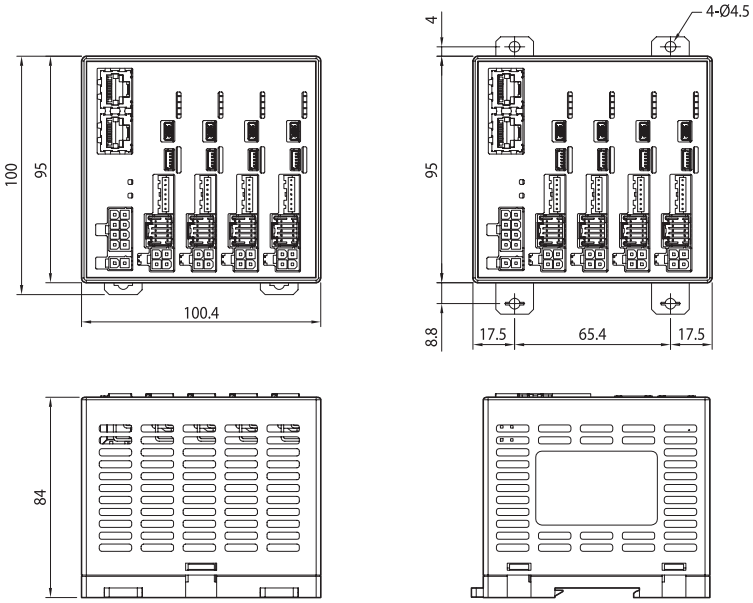

Figure 1.2: Dimensions

1.3 EtherCAT Specifications

Type of Communication	EtherCAT
Physical Layer	Ethernet - 100BASE-TX
Connector	RJ45 (shielded) ECAT IN : EtherCAT Input ECAT OUT : EtherCAT Output
ECAT Device ID	Set Physical Address at Master : 1 ∼ 65535
Topology	Line (Structured by Products only) Tree, Star (When use Junction products)
Support Protocol	CoE (CANopen application protocol over EtherCAT) FoE (File Access over EtherCAT)
Control Profile	CiA402 drive profile (IEC61800-7)
Supported Operation Mode	Cyclic Synchronous Position Mode Profile Position Mode Homing Mode
Synchronization	Free Run, SM Event, DC SYNC Event (minimum cycle time: 250us)
Processing Data	Configurable PDO Mapping

Table 1.1: Communication Specification

1.4 Drive Specification

Input Voltage		24VDC ±10%
Control Method		Closed loop control with 32bit MCU
Current Consumption		Max 500mA/axis (Except motor current)
Operating Condition	Ambient Temperature	In Use : 0 ∼ 50°C In Storage : -20 ∼ 70°C
	Humidity	In Use : 35 ∼ 85%RH (Non-Condensing) In Storage : 10 ∼ 90%RH (Non-Condensing)
	Vib. Resist.	0.5g
Function	Rotation Speed	0 ∼ 3,000 [rpm]
	Resolution [ppr]	500 ∼ 100,000 pulse (Selectable by parameter)
	Protection Functions	Over Current Error, Over Speed Error, Position Tracking Error, Over Load Error, Over Temperature Error, Over Regenerated Voltage Error, Motor Connect Error, Encoder Connect Error, In-Position Error, ROM Error, Position Overflow Error
	LED Display	Power status, In-Position status, Servo On status, Alarm status
I/O Signal	Input Signals	3 dedicated input (LIMIT+, LIMIT-, ORIGIN)
	Output Signals	Brake

Table 1.2: Drive Specification

Chapter 2

Installation

2.1 Precautions of Installation

1. This product designed for indoor usage and the ambient temperature of the room should be 0 ~ 50°C.
2. If temperature of the case is 50°C, radiate the outside to cool down.
3. Do not install this product under direct rays or near magnetic or radioactive objects.
4. If more than 2 drives are installed in a line, keep the interval of 20mm or more vertically and 50mm or more horizontally at least.

2.2 System Configuration

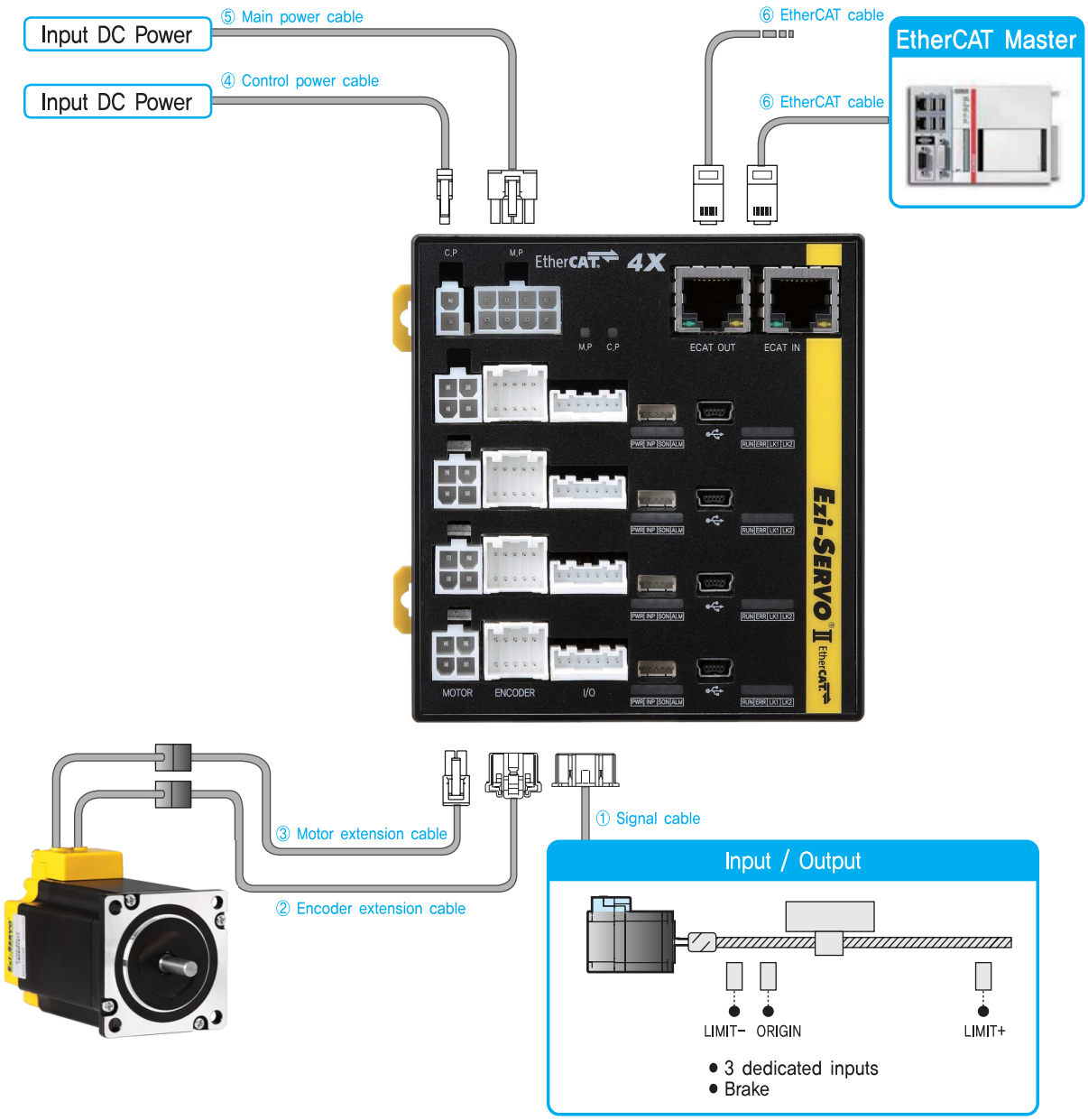

Figure 2.1: System Configuration Diagram of Ezi-SERVOII EtherCAT 4X

2.3 External Wiring Diagram

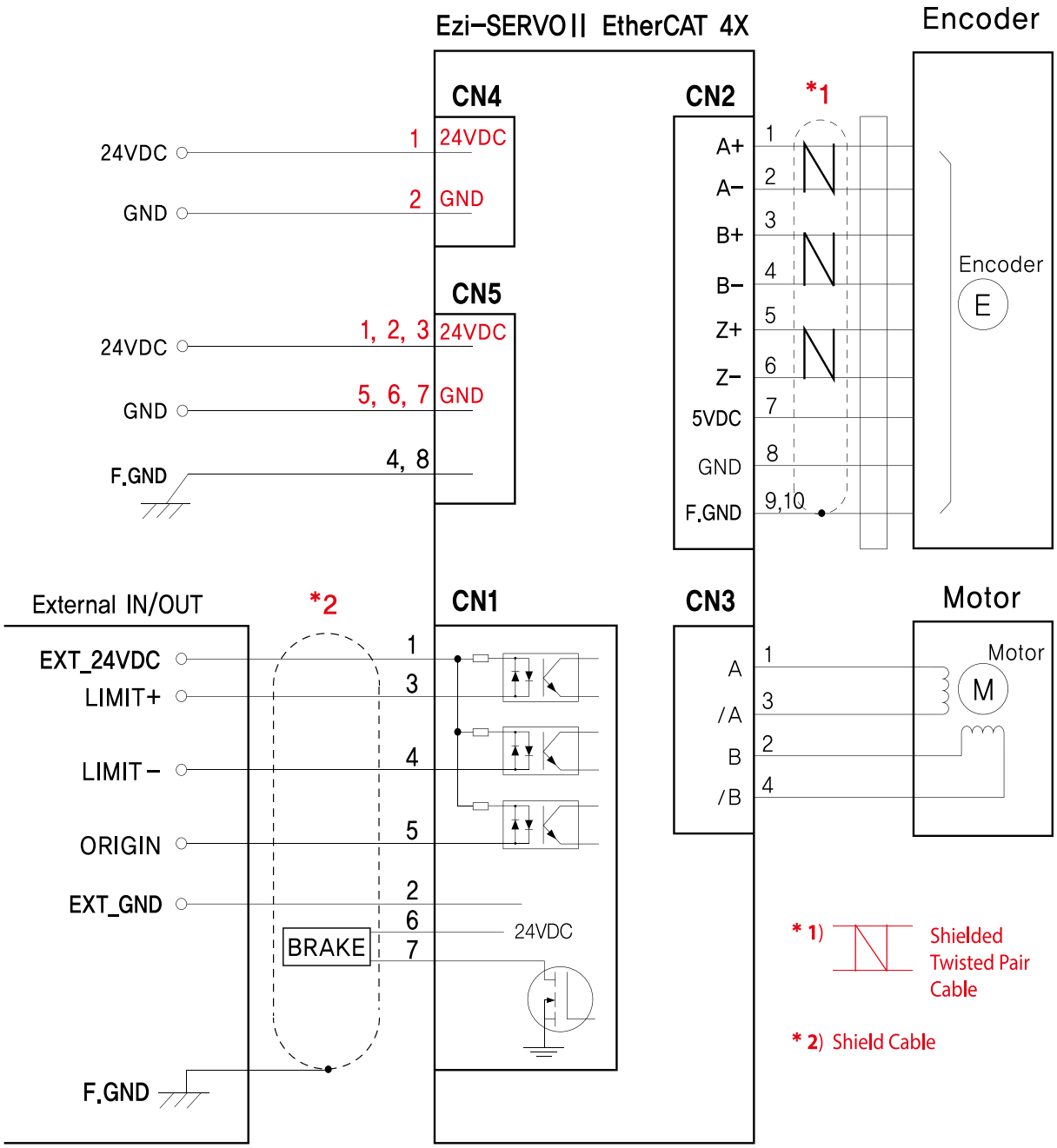

Figure 2.2: External Wiring Diagram of Ezi-SERVOII EtherCAT 4X

2.4 Appearance and Part Name

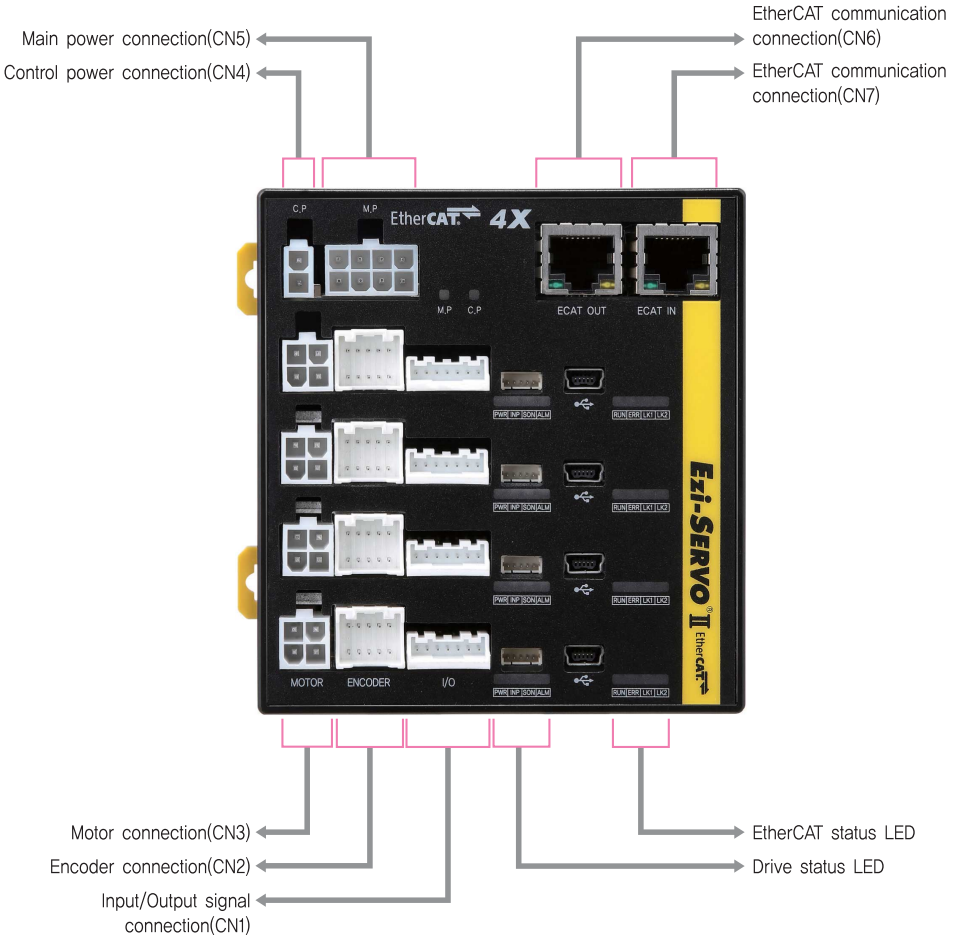

※ Basic configuration of 2X and 3X drive is the same as 4X and only difference is number of axis.

Figure 2.3: Appearance of Ezi-SERVOII EtherCAT 4X

2.4.1 EtherCAT Status LED

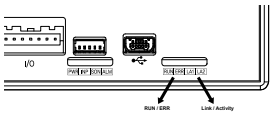

Figure 2.4: EtherCAT Status LED

This LED informs EtherCAT communication status. RUN LED, ERROR LED positions at the front side of product and, Link/Activity LED individually positions at the top of right corner of EtherCAT ports..

Indication	Color	Status	Description
RUN	Green	OFF	Init Status or Power OFF
		Blinking	Pre-Operational Status
		Single Flash	Safe-Operational Status
		ON	Operational Status
		Flickering	Bootstrap Status
ERR	Red	OFF	Non-error status or Power OFF
		Blinking	Extra Error
		Single Flash	Sync Error
		Double Flash	Watch-dog Error
LA1/LA2	Green	OFF	Link not established in physical layer
		ON	Link established in physical layer
		Flickering	In operation after establishing link

Table 2.1: EtherCAT Status LED

Type of Status Indication

EtherCAT LED Status Indication shown as picture as below to check visually.

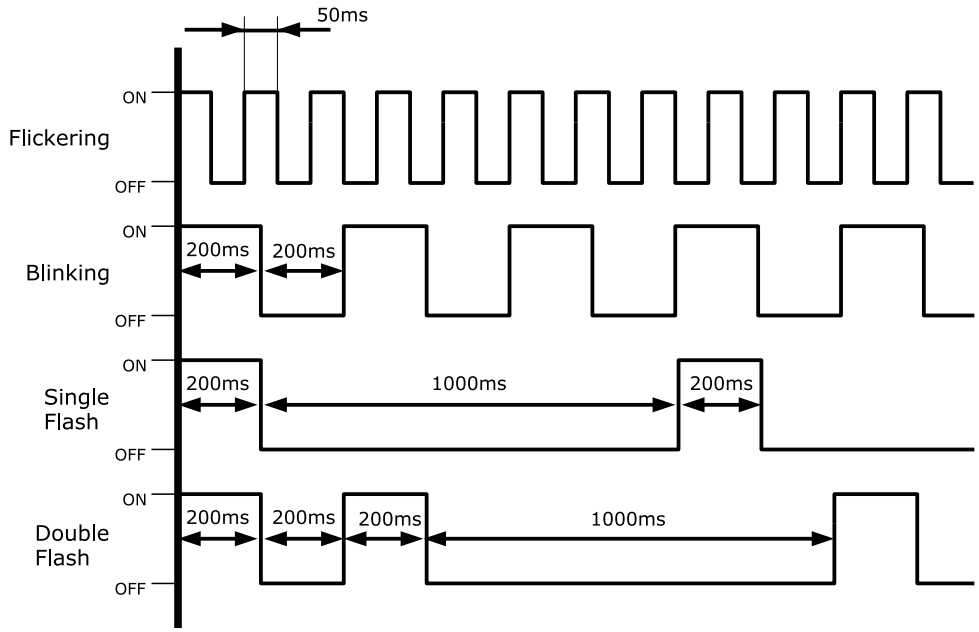

Figure 2.5: EtherCAT LED

2.4.2 EtherCAT Communication Connection

Connect communication cable from Master into communication connection ECAT IN. If there is next controller, connect communication cable from ECAT OUT to next controller of ECAT IN.

No.	Function
1	TD+
2	TD-
3	RD+
4	-
5	-
6	RD-
7	-
8	-
Connection hood	F.GND

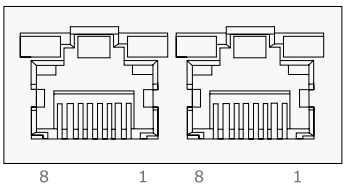

Table 2.2: EtherCAT Connector

EtherCAT Communication Cable

Recommend to use communication cable Min. CAT5e level above.

- CAT5e or above
- Shield type : SF/FTP, S/FTP, SF/UTP
- Length : Max. 50m (Distance between Nodes)

2.4.3 I/O Connector

Input and output signals of the drive are all photo-coupler protected, the signal status of internal photo-couplers [ON:conduction], [OFF:Non-conduction], not displaying the voltage levels of the signal.

No.	Function	I/O
1	EXT 24VDC	Input
2	EXT GND	Input
3	LIMIT+	Input
4	LIMIT-	Input
5	ORIGIN	Input
6	BRAKE +	Output
7	BRAKE -	Output

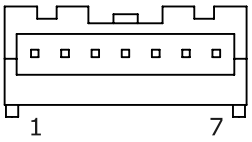

Table 2.3: I/O Connector

Limit and Origin input signal

Connect Limit sensor and origin sensor to IN/OUT Connector of LIMIT+, LIMIT-, ORIGIN Pin. LIMIT+ and LIMIT- sensor works to limit each axis of rotation range to CW and CCW direction, using for protection of mechanical collision or others. ORIGIN Sensor uses to assign origin of mechanisms.

Brake Signal Output Signal

Brake function prevents motor rotation under Servo OFF Status by BRAKE+ / BRAKE- pin of I/O Connector (2.3 I/O Connector). ‘BRAKE+’ is for +24V externally supplied to operate Brake circuit and ‘BRAKE-’ is output signal for actual motor control. Control signal automatically generates according to Servo ON/OFF status and Alarm generation. This output function can be only using under 600[mA]/DC24V of Brake current consumption.

Input Signal

Please individually prepare Power for Input circuit as DC 24V ±10%(Current consumption is around 5mA/Circuit)

Output Signal

Please individually prepare Power Supply for Output circuit. Possible to share with power supply for input circuit and in this case, please add capacity of power supply for output into capacity of power supply for input. Supply voltage and capacity of power for control output connection as below.

- Less than 30V of supply voltage
- Less than 15mA of current flow

2.4.4 Encoder Connection Connector

No.	Function	I/O
1	A+	Input
2	A-	Input
3	B+	Input
4	B-	Input
5	Z+	Input
6	Z-	Input
7	5VDC	Output
8	GND	Output
9	F.GND	-
10	F.GND	-

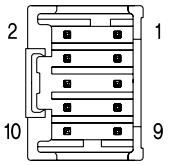

Table 2.4: Encoder Connection Connector

2.4.5 Motor Connection Connector

No.	Function	I/O
1	A Phase	Output
2	B Phase	Output
3	/A Phase	Output
4	/B Phase	Output

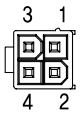

Table 2.5: Motor Connection Connector of Ezi-SERVOII EtherCAT 4X

2.4.6 Power Connection Connector

No.	Function	I/O
1	24VDC	Input
2	GND	Input

Table 2.6: Control Power Connection Connector of Ezi-SERVOII EtherCAT 4X

No.	Function	I/O
1	24VDC	Input
2	24VDC	Input
3	24VDC	Input
4	F.GND	-
5	GND	Input
6	GND	Input
7	GND	Input
8	F.GND	-

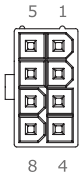

Table 2.7: Main Power Connection Connector of Ezi-SERVOII EtherCAT 4X

2.4.7 USB Connector

Connect to a PC using USB cable to the USB Connector. Monitoring status of drive and setting parameters are possible using a provided PC program (Network Setting Program).

No.	Function
1	V_{BUS}
2	D-
3	D+
4	-
5	GND

Table 2.8: USB Connector

Please use USB 2.0 Mini Type B connector.

Information

For more information on the PC program, please refer to the program manual.

2.5 Appendix

2.5.1 Extension Cable for Motor

For cable extension between Motor and Drive.

Connector of Drive		Wiring	Connector of Motor	
Pin layout	Pin number		Pin number	Pin layout
	1 2 3 4	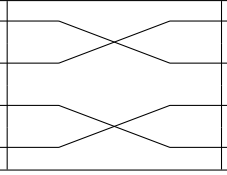	1 2 3 4	

Table 2.9: Wiring Diagram of Ezi-SERVOII EtherCAT 4X

2.5.2 Extension Cable for Encoder

For cable extension between Encoder and Drive.

Connector of Drive		Wiring	Connector of Motor	
Pin layout	Pin number		Pin number	Pin layout
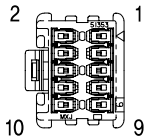	1		1	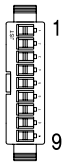
	2		2	
	3		3	
	4		4	
	5		5	
	6		6	
	7		7	
	8		8	
	9[1]		9[1]	
	10			

[1] Connect to Shield

Table 2.10: Wiring Diagram

2.5.3 Connector Specifications

The connector specifications used to connect the drive.

Usage		ITEM	Part Number	Maker
Main Power		Housing Terminal	5557-08R 5556T	MOLEX
Control Power		Housing Terminal	5557-02R 5556T	MOLEX
Motor	Drive side	Housing Terminal	5557-04R 5556T	MOLEX
	Motor side	Housing Terminal	5557-04R 5556T	MOLEX
Encoder	Drive side	Housing Terminal	51353-1000 56134-9000	MOLEX
	Motor side	Housing Terminal	SMP-09V-NC SHF-001T-0.8BS	JST
Signal		Connector Backshell	10120-3000VE 10320-52AO-008	3M

Table 2.11: Connector specification of Ezi-SERVOII EtherCAT 4X

- These connectors are serviced together with Ezi-SERVOII EtherCAT 4X except when purchasing option cables.
- Above connector is the most suitable product for Ezi-SERVOII EtherCAT 4X. Another equivalent connector can be used.

Chapter 3

EtherCAT Communication

3.1 CAN application protocol over EtherCAT

Ezi-SERVOII EtherCAT 4X is EtherCAT communication embedded type of controller to support CAN application protocol over EtherCAT (CoE). EtherCAT Slave structure is as below.

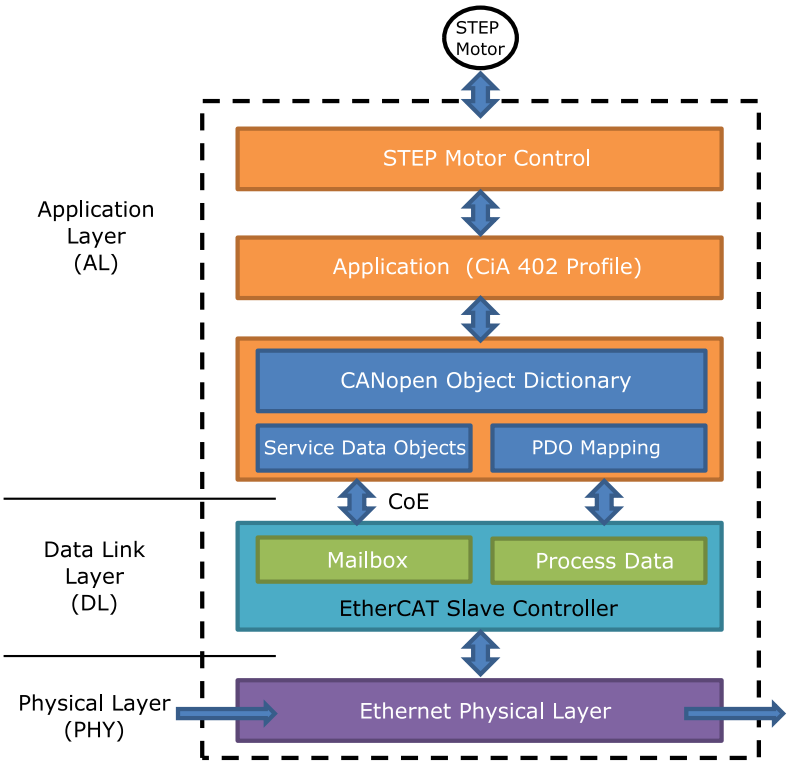

Figure 3.1: EtherCAT Structure

3.1.1 Object Dictionary

Object Dictionary is dictionary of Objects what product has.

3.1.2 Mailbox Communication

Master and Slave commands and receives Service Data Object (SDO) at Mailbox communication (SDO Communication). This communication method is the way of message transfer and master delivers command and slave responses.
SDO Communication used for setting or confirmation of objects at Object Dictionary. This communication can be used under Pre-Operational, Safe-Operational, Operational status of controller.

3.1.3 Process Data Communication

Process Data Communication (PDO Communication) commands and receives Process Data Objects (PDO) with Master periodically. Data that will be delivered and received is already defined at the initial stage of communication by PDO Mapping.
PDO communication is categorized as transmission PDO (following TxPDO) delivers controller status information and Receipt PDO (following RxPDO) delivers command from master.
This communication can be used under Operational status of controller and TxPDO is only available for Safe-Operational.

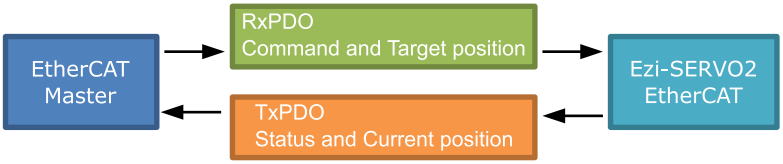

Figure 3.2: EtherCAT PDO Communication

3.2 PDO Mapping

PDO Mapping is to set Application Object will be delivered and received by PDO communication.

3.2.1 PDO Mapping

TxPDO Mapping information to be delivered to Master is to set at 1600h ~ 1601h Object and RxPDO Mapping information to be received command from master is to set at 1A00h ~ 1A01h Object.
Object ID value, Low level Index value, length of data (bit unit) of data that will be delivered and received are recorded at Mapping Table.

RxPDO Mapping

PDO Map Object		Object Contents		
Index	Sub	Object	Sub	Size
0x1601	1	0x6040	0x00	0x10
0x1601	2	0x607A	0x00	0x20
0x1601	3	0x6081	0x00	0x20
0x1601	4	0x6060	0x00	0x08
0x1601	5	0x0000	0x00	0x00

Application Object List

Object	Sub	Name
0x6040	0x00	Control Word
0x6060	0x00	Mode of Operation
0x607A	0x00	Target Position
0x6081	0x00	Profile Velocity
0x0000	0x00	

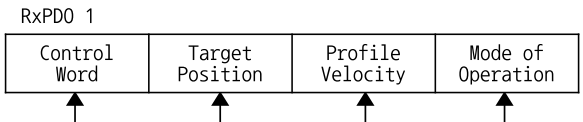

Figure 3.3: PDO Mapping

3.2.2 PDO Assign

PDO Assign is to set PDO Mapping Object will be assigned at SyncManager.

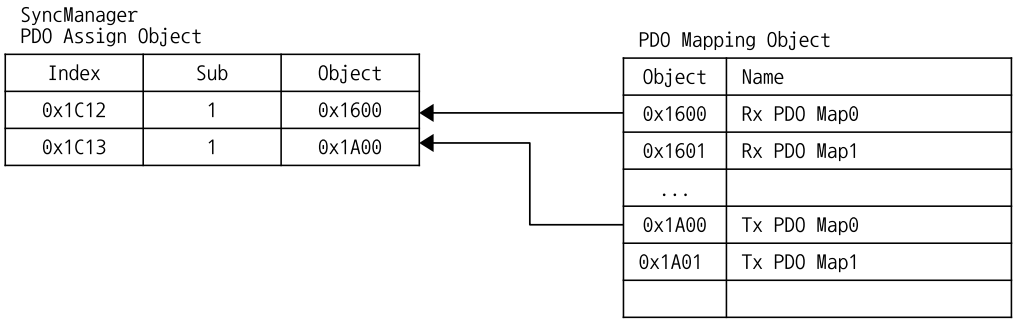

Figure 3.4: PDO Assign

1C12h is object to assign RxPDO and can assign one object among RxPDO Object 1600h or 1601h.
1C13h is object to assign TxPDO and can assign one object among TxPDO Object 1A00h or 1A01h.

3.3 EtherCAT State Machine

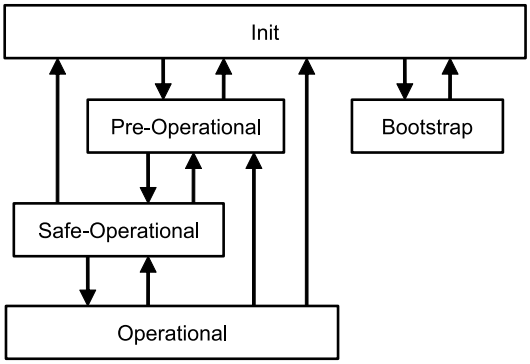

Figure 3.5: EtherCAT State Machine

EtherCAT controller of status motion is controlled by EtherCAT Master.

Status	SDO	RxPDO	TxPDO	Description
Init	Non Available	Non Available	Non Available	EtherCAT communication is to reset. Status of communication is not available at this stage.
Pre-Operational	Available	Non Available	Non Available	After initialization of communication, enters into this stage. Network setting is initialized. Only mailbox communication is available at this stage.
Safe-Operational	Available	Non Available	Available	Stage of TxPDO communication is available.
Operational	Available	Available	Available	All of communication is available.
Bootstrap	Available	Non Available	Non Available	Only mailbox communication is available. Possible to renew F/W of product with using FoE Protocol at this stage.

Table 3.1: EtherCAT Operational State

3.4 Synchronization

Synchronization modes provided from controller are as below.

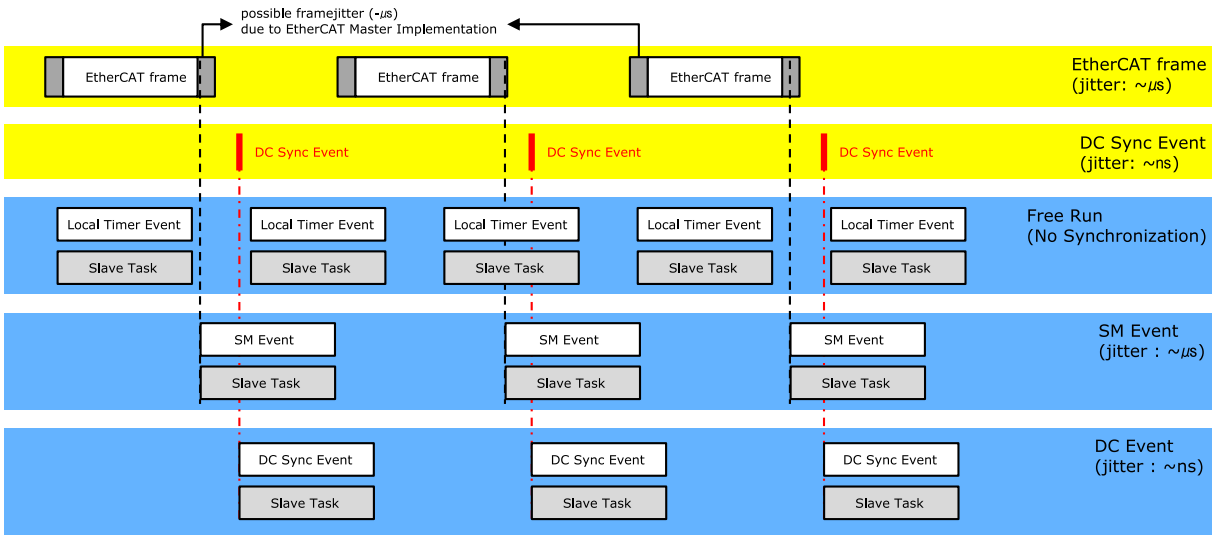

Figure 3.6: Type of EtherCAT Synchronization and Differences

3.4.1 Free Run

Controller runs under non-synchronization with Master. Under Free Run mode, Master and Controller has an individual independent Cycle.

3.4.2 SM Event

Controller runs under synchronization with SM Event of EtherCAT communication. SM Event is generated once controller receives EtherCAT Frame.
Once synchronization by SM Event, each one of controller has few us range of jitter.

3.4.3 DC Sync Event

Synchronized controller runs under Sync Interrupt is generated according to Distributed Clock (following DC).
DC is synchronized time shared between Master and Slave. With synchronized clock, interrupt is generated under accurate synchronization and controller executes commands under accurate timing.
In this case, each one of controller has few us range of jitter.

3.5 EtherCAT Slave Information

EtherCAT Slave Information file (XML File) is needed to connect controller with EtherCAT Master. This file is described slave device information as XML format based on EtherCAT specifications. With recording of XML file into EtherCAT Master Equipment through EtherCAT setting equipment, easily implement PDO and SDO setting of Slave device.

Information

XML file can be downloaded from product website of archives.

Chapter 4

CiA402 Drive Profile

4.1 Drive Status Control

Status of product moves as follows. Status movement is executed by status of controller and Control word (6040h) and current status can be checked by Status word (6041h).

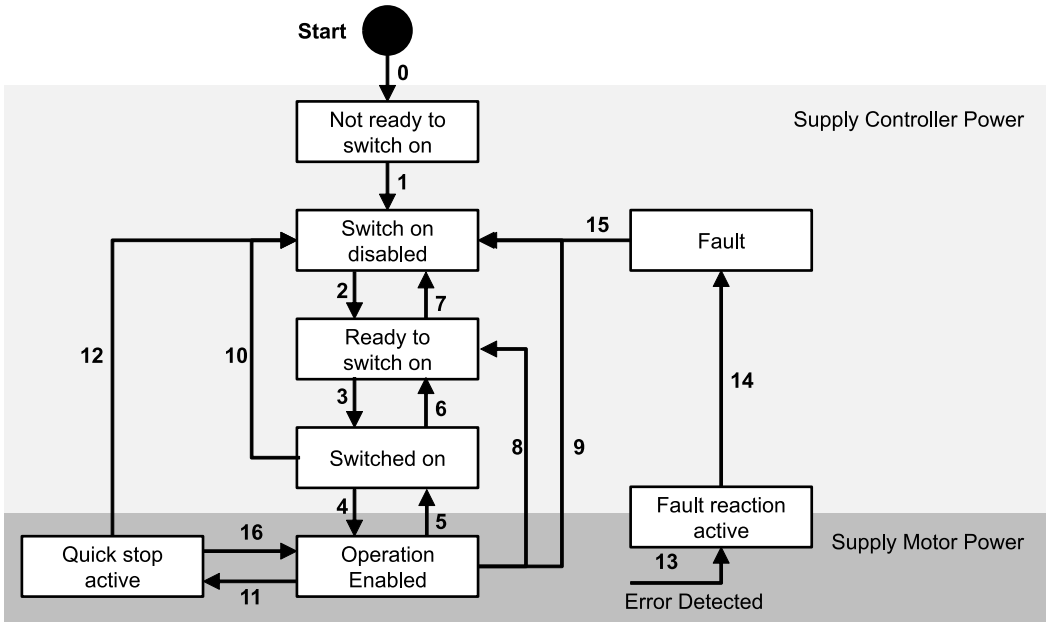

Figure 4.1: Drive State Machine

Status movement and meaning of each status is as follows.

Transition	Event	Action
0	Automatic transition after power-on or reset application	Drive self-test and/or self initialization shall be performed.
1	Automatic transition	Communication shall be activated
2	Automatic transition[1] or Shutdown command from control device	
3	Switch On command from control device	
4	Enable Operation command from control device	The drive function shall be enabled.
5	Disable Operation command from control device	The drive function shall be disabled, Motor power shall be switched off.
6	Shutdown command from control device	
7	Quick Stop or Disable Voltage command from control device	
8	Shutdown command from control device	The drive function shall be disabled, Motor power shall be switched off.
9	Disable Voltage command from control device	The drive function shall be disabled, Motor power shall be switched off.
10	Quick Stop or Disable Voltage command from control device	
11	Quick Stop command from control device	The quick stop function shall be started.
12	Automatic transition (depends on the Quick stop option code)	The drive function shall be disabled, Motor power shall be switched off.
13	Fault signal	the configured fault reaction function shall be executed.
14	Automatic transition	The drive function shall be disabled, Motor power shall be switched off.
15	Fault Reset command from control device	A reset of the fault condition is carried out.
16	Enable Operation command from control device (depends on the Quick stop option code)	The drive function shall be enabled.

[1] This transition is configurable. Please refer to Object 2030h: Advanced settings Sub-Index 2 - Disable Automatic transition 2.

Table 4.1: State transition

Each status of functions supported by controller as follows.

Status	Brake Function	Motor Power	Control Command
Not ready to switch on	Yes	No	No
Switch on disabled	Yes	No	No
Ready to switch on	Yes	No	No
Switched on	Yes	No	No
Operation enabled	Yes	Yes	Yes
Quick stop active	Yes	Yes	Yes
Fault reaction active	Yes	Yes	Yes
Fault	Yes	No	No

Table 4.2: Function per Status

4.1.1 Control word

Bit 15	Bit 14	Bit 13	Bit 12	Bit 11	Bit 10	Bit 9	Bit 8
-	-	oms[2]		-	-	-	Halt
Bit 7	Bit 6	Bit 5	Bit 4	Bit 3	Bit 2	Bit 1	Bit 0
Fault Reset	oms			Enable Operation	Quick Stop	Enable Voltage	Switch On

Table 4.3: Control word

Able to control the status of controller by 0 $\sim$ 3, 7 bits of Control word and bits per target status are as follows.

Command	Bit of Control word					Transition
	Bit 7	Bit 3	Bit 2	Bit 1	Bit 0	
Shutdown	0	x	1	1	0	2, 6, 8
Switch on	0	0	1	1	1	3
Switch on + Enable operation	0	1	1	1	1	3 + 4
Disable voltage	0	x	x	0	x	7, 9, 10, 12
Quick stop	0	x	0	1	x	7, 10, 11
Disable Operation	0	0	1	1	1	5
Enable Operation	0	1	1	1	1	4, 16
Fault reset	0 $\rightarrow$ 1	x	x	x	x	15

Table 4.4: Set Control word for status movement

If Quick stop option code (605Ah) of value is 5, 6 under Quick stop active status, waiting at correspondent status. Able to move to Operation Enabled status by 'Enable Operation' command of Control word. Other bits are as follows.

Bit	Value	Description
8	0	The motion is executed or continued.
	1	Stop motor according to Halt option code (605Dh).

Table 4.5: Bit description of Control word

4.1.2 Status word

Bit 15	Bit 14	Bit 13	Bit 12	Bit 11	Bit 10	Bit 9	Bit 8
-	oms			Internal Limit Active	oms	Remote	oms
Bit 7	Bit 6	Bit 5	Bit 4	Bit 3	Bit 2	Bit 1	Bit 0
-	Switch on disabled	Quick stop	Voltage enabled	Fault	Operation enabled	Switched on	Ready to switch on

Table 4.6: Status word

Status word of values per each status are as follows.

[2]oms : it's an abbreviation for Operation mode specific. Functions vary depending on the Operation Mode. Please refer to the Control word description for each Operation Mode.

The current drive state (Drive State Machine) can be checked through the state of some bits.

Status word	Status
xxxx xxxx x0xx 0000b	Not ready to switch on
xxxx xxxx x1xx 0000b	Switch on disabled
xxxx xxxx x01x 0001b	Ready to switch on
xxxx xxxx x011 0011b	Switched on
xxxx xxxx x011 0111b	Operation enabled
xxxx xxxx x00x 0111b	Quick stop active
xxxx xxxx x0xx 1111b	Fault reaction active
xxxx xxxx x0xx 1000b	Fault

Table 4.7: Current status following by Status word

Other bits are as follows.

Bit	Value	Description
9	1	Control word processed normally.
11	1	Software Limit was detected.

Table 4.8: Bit description of Status word

4.2 Error Code

Once Error generates at Controller (Sense Fault signal), changed to ‘Fault reaction active’ status. Under ‘Fault’ / ‘Fault reaction active’ status, types of error can be checked by Error code (603Fh).

Error code Hex / Dec	History[1]	Status	Description
7500h / 29952	500	EtherCAT Communication Error	An error occurred in EtherCAT Communication.
FF01h / 65281	1	Over Current Error	The current through power devices in inverter exceeds 4.8A.
FF02h / 65282	2	Over Speed Error	Motor speed exceed 3,000 [rpm].
FF03h / 65283	3	Position Tracking Error	Position error value is higher than set value.[2]
FF04h / 65284	4	Over Load Error	The motor is continuously operated more than 5 second under a load exceeding the Max. torque of motor.
FF05h / 65285	5	Over Temperature Error	Inside temperature of drive exceeds 85°C.
FF06h / 65286	6	Over Regenerated Voltage Error	Motor Back-EMF is higher than 48V.
FF07h / 65287	7	Motor Connection Error	Abnormal connection between drive and motor.
FF08h / 65288	8	Encoder Connection Error	Abnormal connection between drive and encoder.
FF09h / 65289	9	Main Power Error	The input voltage of the main power is too low or disconnected.
FF0Ah / 65290	10	In-position Error	After operation is finished, position error (over 1) generated more than 3 seconds.
FF0Ch / 65292	12	ROM Error	Error occurs in parameter storage device. (ROM)
FF0Fh / 65295	15	Position Overflow Error	Position error value is higher than given value after completion of position movement command.[2]
FF31h / 65329	49	Drive Alarm	Generated Extra alarms generated from drive.
FF32h / 65330	50	Internal communication error of drive	Communication error from internal components of drive generated. (Time-out)
FF34h / 65332	52	Internal communication error of drive	Communication error from internal components of drive generated. (CRC Failed)
FF35h / 65333	53	Internal communication error of drive	Communication error from internal components of drive generated. (Command Failed)
FF3Ch / 65340	60	Torque enable Failure	The SVON signal of drive was not on during the Torque Enable process.
FF3Dh / 65341	61	Push command Failure	Push command of drive failed.
FF3Fh / 65343	63	Drive SVOFF Detect	Drive is torque disabled by itself.
FF41h / 65345	65	Torque enable Failure	In-position signal is unstable or not detected during Torque Enable.
FF42h / 65346	66	Torque disable Failure	The SVON signal of drive was not off during the Torque Enable process.
FF43h / 65347	67	Homing Failure	In-position signal is unstable or not detected during the homing process.
FF44h / 65348	68	Over Speed in CSP	In CSP mode, the commanded speed value exceeds the speed limit and cannot be followed.
FF46h / 65350	70	Encoder Count Error	Encoder input signal is abnormal and normal measurement is impossible.
FF47h / 65351	71	Network Initialization Error	An error occurred while initializing the hardware of EtherCAT communication.
FF49h / 65353	73	Synchronization Type Error	CSP mode was used in the wrong EtherCAT synchronization type. CSP mode is available when EtherCAT synchronization type is DC Sync Event.
FF4Ch / 65356	76	Internal communication failure of drive	Failure to start Communication of internal components of drive.
FF64h / 65380	100	ROM Initialization Error	ROM is blank status.
FF65h / 65381	101	ROM Initialization Error	Check sum of ROM is not matched.
FF66h / 65382	102	FRAM Access Error	Error generated during FRAM accessing.
FF6Eh / 65390	110	ROM Reading Error	Error generated during ROM reading.
FF79h / 65401	121	ROM Writing Error	Error generated during ROM writing.
FF7Ah / 65402	122	ROM Writing Error	Error generated during ROM writing.

Error code Hex / Dec	History	Status	Description
FF7Bh / 65403	123	ROM Writing Error	Error generated during ROM writing.
FF7Ch / 65404	124	ROM Writing Error	Error generated during ROM writing.
FFC8h / 65480	200	ROM Data Out of Range Error	Some parameter values stored in ROM are out of range.

[1]The value displayed in the Object 2021h: Error code history.
[2]The given value can be changed. Please refer to Object 6065h: Following error window.

4.3 Mode of operation

Currently activated Mode of operation display (6061h) decides the action of controller. Meaning for some bits of Control word (6040h) and Status word (6041h) Objects can be decided by Mode of operation display (6061h).
Able to set selected operation mode by Mode of operation (6060h). Currently activated operation mode can be checked by Mode of operation display (6061h).
Operation modes supported by current controller are as follows.

Mode of operation	Description	Abbreviation
1	Profile Position Mode	PP
6	Homing Mode	HM
8	Cyclic Synchronous Position Mode	CSP

Table 4.10: Supported Operation Modes

4.4 Cyclic Synchronous Position Mode

4.4.1 Definition

Cyclic Synchronous Position Mode(CSP Mode) assigns target position to controller by Master's operation profile creation function through cyclic communication. Controller internally executes position / velocity control with receipt of target position in each cycle.
To use CSP Mode, Mode of operation (6060h) Cyclic Synchronous Position Mode needs to be set. Mode of operation display (6061h) is shown as Cyclic Synchronous Position Mode, Target position transmitted from master : Object 607Ah: Target position is executed.

4.4.2 Related Objects

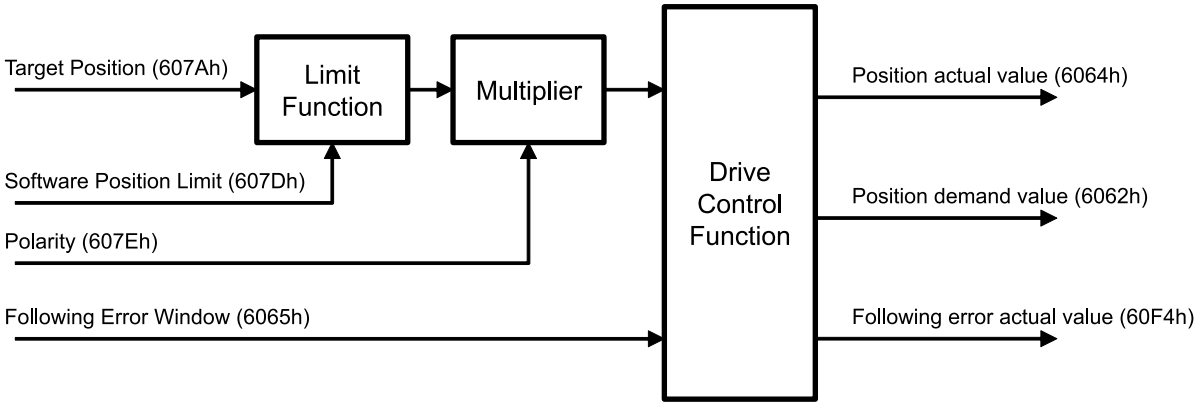

Figure 4.2: CSP Mode Objects

4.4.3 Control word and Status word

Control word

Control word under CSP Mode are as follows.

Bit 15	Bit 14	Bit 13	Bit 12	Bit 11	Bit 10	Bit 9	Bit 8
-	-	-	-	-	-	-	Halt
Bit 7	Bit 6	Bit 5	Bit 4	Bit 3	Bit 2	Bit 1	Bit 0
Fault Reset	-	-	-	Enable Operation	Quick Stop	Enable Voltage	Switch On

Table 4.11: Control word under CSP Mode

Please refer to 4.4 Set Control word for status movement for the rest of bits.

Status word

Status word (6041h) under CSP Mode are as follows.

Bit 15	Bit 14	**Bit 13**	**Bit 12**	Bit 11	Bit 10	Bit 9	Bit 8
-	-	**Following Error**	**Target position ignored**	Internal Limit Active	-	Remote	-
Bit 7	Bit 6	Bit 5	Bit 4	Bit 3	Bit 2	Bit 1	Bit 0
-	Switch on disabled	Quick stop	Voltage enabled	Fault	Operation enabled	Switched on	Ready to switch on

Table 4.12: Status word under CSP Mode

Please refer to drive status control for the rest of bits.

Bit	Value	Description
12	0	Target position value ignored.
	1	Target position value executed.
13	1	Following Error has occurred.

Table 4.13: Bit description of Status word under CSP Mode

For other bits, please refer to 4.6 Status word.

4.5 Profile Position Mode

4.5.1 Definition

Profile Position Mode is to move to target position of Target position (607Ah) object with receipt of Control word (6040h) input.
It is general Point to point operation. To use Profile Position Mode, need to set Profile Position Mode at Mode of operation (6060h).
Mode of operation display (6061h) is shown as Profile Position Mode, ready to use position control command.

4.5.2 Related Objects

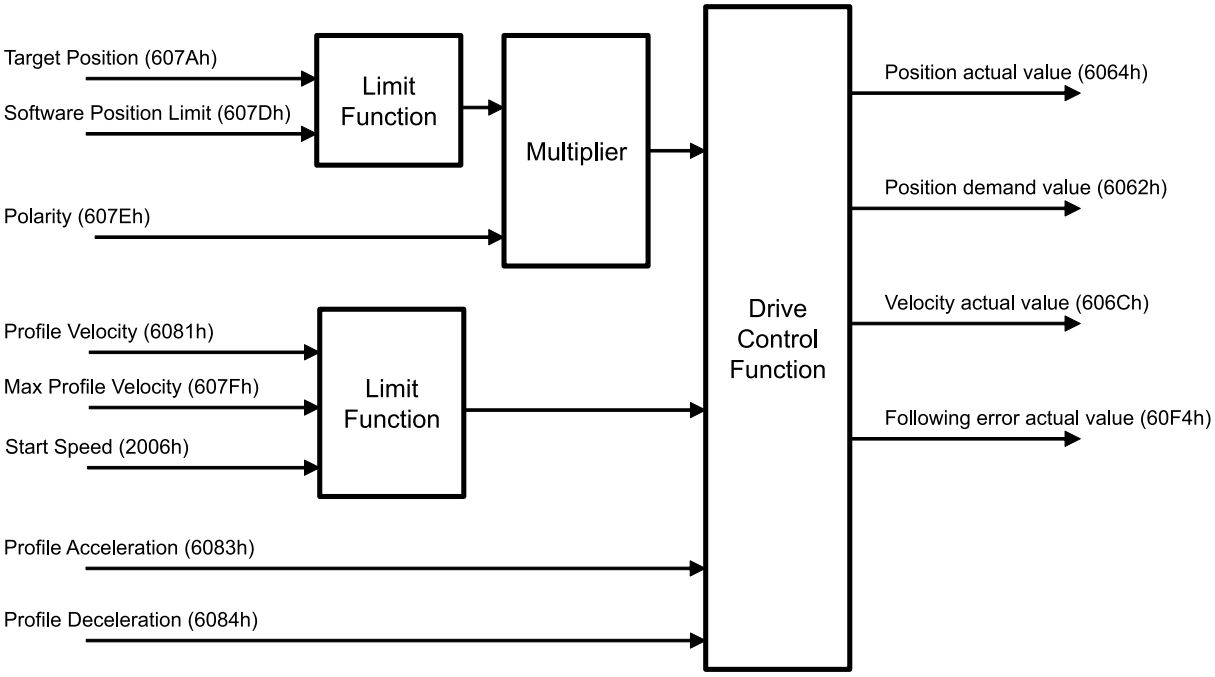

Figure 4.3: Profile Position Mode

4.5.3 Control word and Status word

Control word

Control word under Profile Position Mode are as follows.

Bit 15	Bit 14	**Bit 13**	**Bit 12**	Bit 11	Bit 10	Bit 9	**Bit 8**
-	-	**Non-stop Push**	**Push Mode**	-	-	-	**Halt**
Bit 7	**Bit 6**	**Bit 5**	**Bit 4**	Bit 3	Bit 2	Bit 1	Bit 0
Fault Reset	**Relative**	**Change Set Immediately**	**New Set-Point**	Enable Operation	Quick Stop	Enable Voltage	Switch On

Table 4.14: Control word under Profile Position Mode

Please refer to 4.4 Set Control word for status movement for the rest of bits.

Bit	Value	Description
4	0 → 1	Execute the motion command to a new location. The motion command method is determined by the values of bit 5, 12, 13.
5	0	If the motor is moving when the new motion command is executed, the new motion command is executed after the previous command is completed.
	1	If the motor is moving when the new motion command is executed, it ignored the previous command and moves to the new position immediately.
6	0	The value of Target position (607Ah) is destination position. (absolute position)
	1	The value of Target position (607Ah) is distance. (relative position)
8	1	Cancels the motion command and stops it according to the value of Halt option code (605Dh).
12	0	It's a normal motion command.
	1	The motion command works as a push command.
13	0	In case of Push command, if an object (work) is detected, it stops and the Push command is released.
	1	In case of Push command, it stops when an object (work) is detected, and moves again when the detected object disappears. When a Halt command is received, the Push command is released.

Table 4.15: Bit description of Control word under Profile Position Mode

For other bits, please refer to 4.3 Control word.

Status word

Status word (6041h) under Profile Position Mode are as follows.

Bit 15	**Bit 14**	**Bit 13**	**Bit 12**	Bit 11	**Bit 10**	Bit 9	**Bit 8**
-	**Push Detected**	**Following Error**	**Set-Point Acknowledge**	Internal Limit Active	**Target Reached**	Remote	**Push State**
Bit 7	Bit 6	Bit 5	Bit 4	Bit 3	Bit 2	Bit 1	Bit 0
-	Switch on disabled	Quick stop	Voltage enabled	Fault	Operation enabled	Switched on	Ready to switch on

Table 4.16: Status word under Profile Position Mode

The functions of bits added in Profile Position Mode are as follows.

Bit	Value	Description
10	0	The motor is moving through a motion command.
	1	The motor has stopped.
12	0	Control Word of New Set-Point(Bit 4) has reset and previous position movement command processed. Able to input new position.
	1	Control word of New Set-Point(Bit 4) is already set or previous position movement command is under processing.
13	1	Following Error generated.
8	0	it's a normal motion command.
	1	Push Motion is activated.
14	0	No work is detected in the Push motion.
	1	Work is detected in the Push motion.

Table 4.17: Bit description of Status word under Homing Mode

Please refer to drive status control for the rest of bits.

4.5.4 Position movement method

General Movement

Movement command to new target position can be requested by changing Control word (6040h) of New Set-Point (Bit 4) from RESET to SET. Once controller receives this request, Set-Point Acknowledge of Status word (Bit 12) is going to be SET and position movement command executed. Target position refers to Target position (607Ah) and Position value can be absolute coordinates or relative coordinates by Control word of Relative (Bit 6).

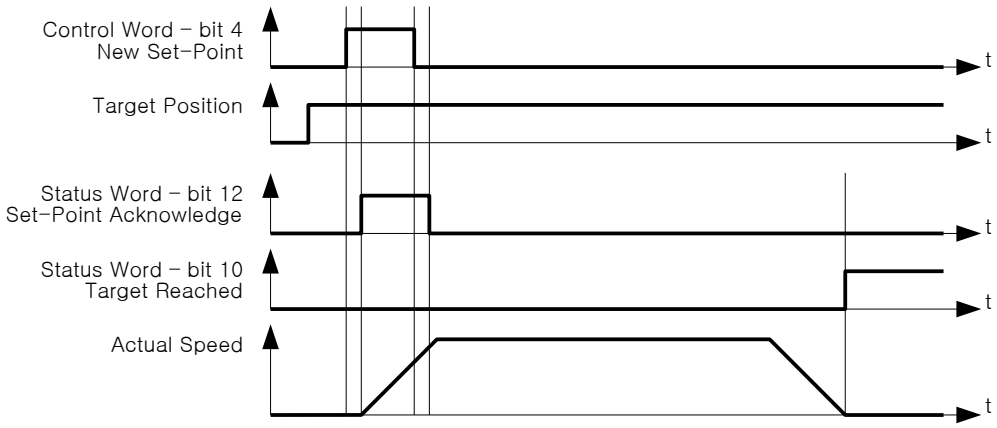

Figure 4.4: New Set-Point

Once reaches at target position, Status word of Target Reached (Bit 10) goes to SET. If it does not reach at target position due to error or status as below, Target Reached (Bit 10) can not be changed as SET.

- Fault status due to Error generation.
- Out of Operation Enabled Status.

Input next target position

Once commands to move to new target position during previous position movement still operates, executes new target position movement command after completion of previous position movement. So if

already inputs next target position at buffer, position movement command can be executed immediately without time delay.

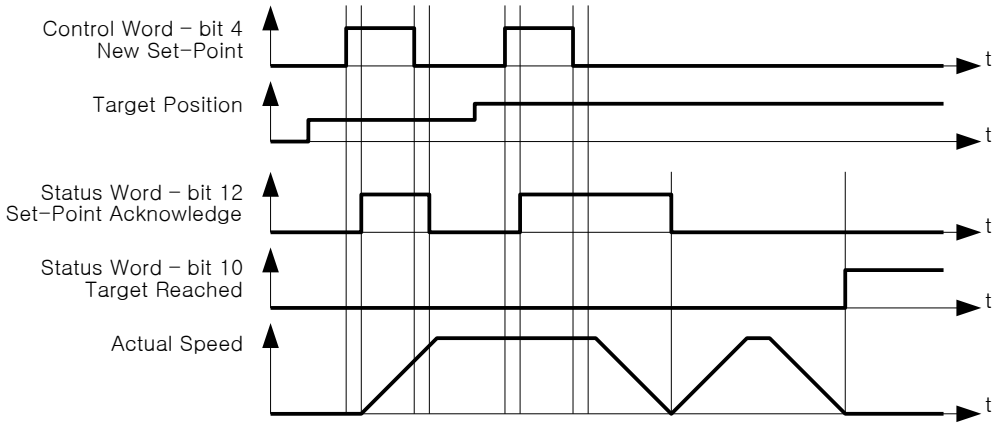

Figure 4.5: Next Set-Point

At this time, Status word of Set-Point Acknowledge (Bit 12) is going to be RESET of Control word of New Set-Point (Bit 4) and it goes to RESET after completion of previous position movement command. Target Reached (Bit 10) goes to SET once all of position movements completed.

Target position override

In case of using Control word of Change Set Immediately (Bit 5) under SET status during position movement command, able to cancel currently operating position movement command and immediately move to new target position.

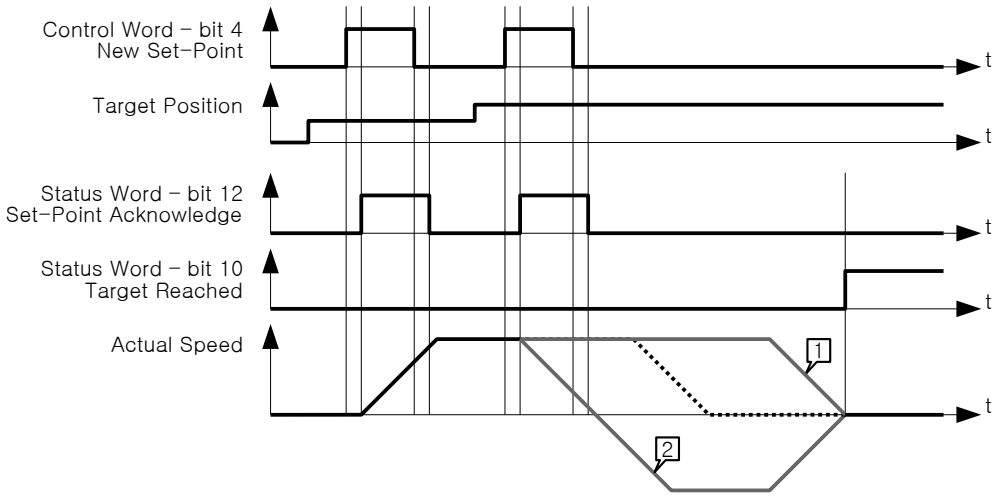

Figure 4.6: Change Set Immediately

1. If new target position is sufficiently ahead of previous target position, it will move to new target position passing by previous target position.
2. If new target position is behind of previous target position, it will be decelerated according to correspondent position and if need, it can stop and move to opposite direction.

If there is no previous position movement command or already completed, command under Change Set Immediately (Bit 5) under SET status is same as general position movement command.

Push Motion (Stop Mode)

The Push Motion (Stop Mode) of Ezi-SERVOII EtherCAT 4X moves motor to the Target Position while maintaining the specified torque, and stops and finishes Push Motion when a work is detected. The motor torque during the Push Motion can be set through Push ratio of Object 201Ah: Push Mode. Pull back distance of Object 201Ah: Push Mode allows to set the distance to pull back the motor when the Push Motion is finished.
To do Push Motion (Stop Mode) to the new Target Position, Set Push Mode (Bit 12) and Reset Non-stop Push (Bit 13) before change New Set-Point (Bit 4) of Control word from RESET to SET. Once controller receives this request, Set-Point Acknowledge (Bit 12) and Push State (Bit 8) of Status word become SET and the Push Motion is executed. Target position refers to Target position (607Ah) and Position value can be absolute coordinates or relative coordinates by Control word of Relative (Bit 6).
In the Push Motion (Stop Mode), the Push Motion is finished when a work is detected or the target position is reached.

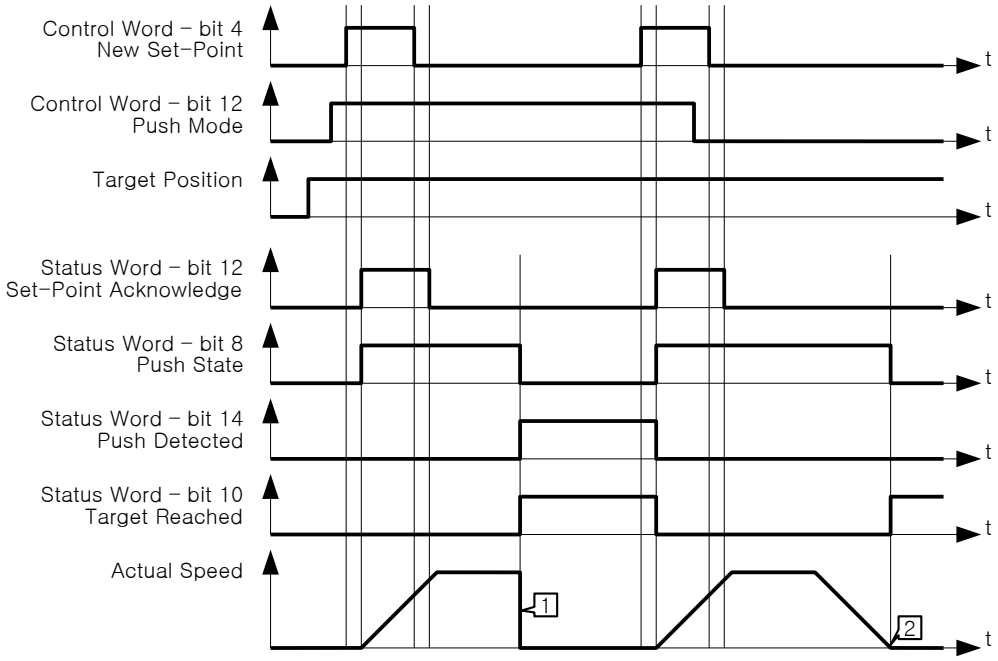

Figure 4.7: Push Motion (Stop Mode)

1. A work was detected before reaching the target position. The detection status can be judged by Push Detected (Bit 14) of Status word. controller do quick-stop when a work is detected.
2. The target position has been reached without detecting a work.

Information

If the motor speed is fast or the value of Push ratio is low, it may be determined that a work is detected even if a work is not detected actually. In this case, lower the motor speed or increase the Push ratio.

Information

If the motor is moving with the previous move command, the push command cannot be executed. Please execute the command after the motor has completely stopped.
The 'Input next target position' and 'Target position override' commands are not allowed during the Push Motion.

Push Motion (Non-stop Mode)

The Push Motion (Stop Mode) of Ezi-SERVOII EtherCAT 4X moves motor to the Target Position while maintaining the specified torque. Stops motor when a work is detected, but it moves again when a work is disappeared. it continues the Push Motion until a stop command is received. The motor torque during the Push Motion can be set through Push ratio of Object 201Ah: Push Mode. Pull back distance of Object 201Ah: Push Mode allows to set the distance to pull back the motor when the Push Motion is finished.
To do Push Motion (Non-stop Mode) to the new Target Position, Set Push Mode (Bit 12) and Non-stop Push (Bit 13) before change New Set-Point (Bit 4) of Control word from RESET to SET. Once controller receives this request, Set-Point Acknowledge (Bit 12) and Push State (Bit 8) of Status word become SET and the Push Motion is executed. Target position refers to Target position (607Ah) and Position value can be absolute coordinates or relative coordinates by Control word of Relative (Bit 6).
In the Push Motion (Non-stop Mode), the Push Motion is not finished even if a work is detected or the target position is reached. the Push Motion is finished when Halt (Bit 8) of Control word becomes SET.

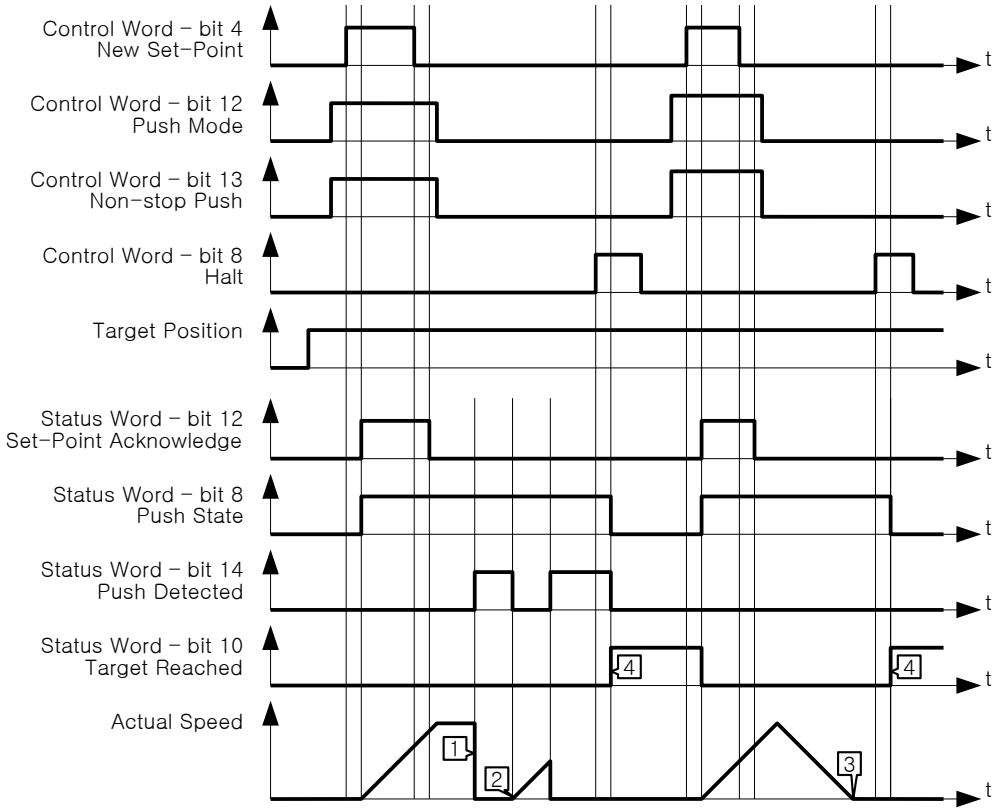

Figure 4.8: Push Motion (Non-stop Mode)

1. A work was detected. The detection status can be judged by Push Detected (Bit 14) of Status word.
2. It continues the Push Motion when a work is disappeard.
3. The target position is reached. But the Push Motion is not finished.
4. When Halt (Bit 8) of Control word becomes SET, the motor stops and the Push Motion is finished. the Target Reached (Bit 10) of Status word becomes SET after finished the Push Motion.

Information

If the motor speed is fast or the value of Push ratio is low, it may be determined that a work is detected even if a work is not detected actually. In this case, lower the motor speed or increase the Push ratio.

Information

If the motor is moving with the previous move command, the push command cannot be executed. Please execute the command after the motor has completely stopped.
The ’Input next target position’ and ’Target position override’ commands are not allowed during the Push Motion.

4.6 Homing Mode

4.6.1 Definition

Homing Mode is the way of heading to origin with command of Control word (6040h). To use Homing Mode, need to set Homing Mode at Mode of operation (6060h). Able to use origin search command once Mode of operation display (6061h) indicates Homing Mode.

4.6.2 Relative Objects

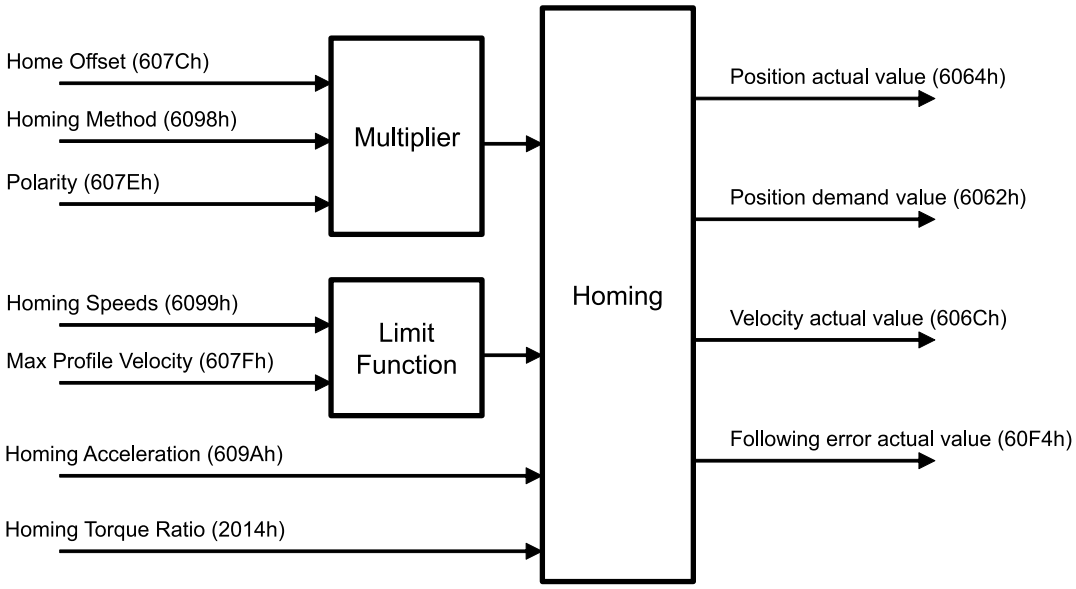

Figure 4.9: Homing Mode Objects

There are 4 kinds (Origin Switch, Positive Limit Switch, Negative Limit Switch, Index pulse of Encoder) switches to find out origin. And it can be differentiated by Homing method (6098h).
If it is not Homing method by Limit Switch, once Limit Switch goes ON during origin searching, it will move to opposite direction against movement direction. During motion towards opposite direction, if opposite side of Limit Switch goes ON, origin search goes failure.
If Sensor origin and mechanical origin is different, able to set with using Home offset (607Ch). Once position of mechanical origin is set to Home Offset, Status word - bit 12: Home Attained is going to be ON and position objects will be initialized.
When Limit Switch is ON during Homing operation, it stops to change the direction. How to stop after detection of Limit Switch follows Object 2003h: Limit stop method setting.

4.6.3 Control word and Status word

Control word

Control word at Homing Mode are as follows.

Bit 15	Bit 14	Bit 13	Bit 12	Bit 11	Bit 10	Bit 9	**Bit 8**
-	-	-	-	-	-	-	**Halt**
Bit 7	Bit 6	Bit 5	**Bit 4**	Bit 3	Bit 2	Bit 1	Bit 0
Fault Reset	-	-	**Homing Operation Start**	Enable Operation	Quick Stop	Enable Voltage	Switch On

Table 4.18: Control word under Homing Mode

The functions of bits added in Homing Mode are as follows.

Bit	Value	Description
4	$0 \rightarrow 1$	Initiate origin search command.
8	1	Origin search command canceled and stops according to set action at Halt option code (605Dh).

Table 4.19: Bit description of Control word under Homing Mode

For other bits, please refer to 4.3 Control word.

Status word

Status word at Homing Mode are as follows.

Bit 15	Bit 14	**Bit 13**	**Bit 12**	Bit 11	**Bit 10**	Bit 9	Bit 8
-	-	**Homing Error**	**Homing attained**	Internal Limit Active	**Target Reached**	Remote	-
Bit 7	Bit 6	Bit 5	Bit 4	Bit 3	Bit 2	Bit 1	Bit 0
-	Switch on disabled	Quick stop	Voltage enabled	Fault	Operation enabled	Switched on	Ready to switch on

Table 4.20: Status word under Homing Mode

Please refer to drive status control for the rest of bits.

Bit 13	Bit 12	Bit 10	Description
x	x	0	Origin search operation is on-going.
0	0	1	Origin search operation canceled or not started yet.
0	1	1	Origin search has successfully completed.
1	0	1	Origin search has failed. Controller stops.

Table 4.21: Bit description of Status word under Homing Mode

For other bits, please refer to 4.6 Status word.

4.6.4 Origin Search Method

Origin search methods supported by this product are as follows.

Homing method	Name
1	Homing on Negative Limit Switch and Index Pulse
2	Homing on Positive Limit Switch and Index Pulse
7	Homing on Origin Switch (Positive Direction, Negative Edge) and Index Pulse
10	Homing on Origin Switch (Positive Direction, Positive Edge) and Index Pulse
11	Homing on Origin Switch (Negative Direction, Positive Edge) and Index Pulse
14	Homing on Origin Switch (Negative Direction, Negative Edge) and Index Pulse
17	Homing on Negative Limit Switch
18	Homing on Positive Limit Switch
24	Homing on Origin Switch (Positive Direction, Negative Edge)
25	Homing on Origin Switch (Positive Direction, Positive Edge)
28	Homing on Origin Switch (Negative Direction, Positive Edge)
29	Homing on Origin Switch (Negative Direction, Negative Edge)
33	Homing Index Pulse (Negative Direction)
34	Homing Index Pulse (Positive Direction)
35	Set the current position origin
37	Set the current position origin and reset current position
-3	Homing on Negative Limit touch
-4	Homing on Positive Limit touch
-5	Homing on Negative Limit touch and Index Pulse
-6	Homing on Positive Limit touch and Index Pulse

Table 4.22: Homing Method List

Supported origin searching method lists can be also checked from Supported homing methods (60E3h). In the description below, 'Index pulse' refers to the Z Phase singal of the encoder.

Method 1: Homing on Negative Limit Switch and Index Pulse

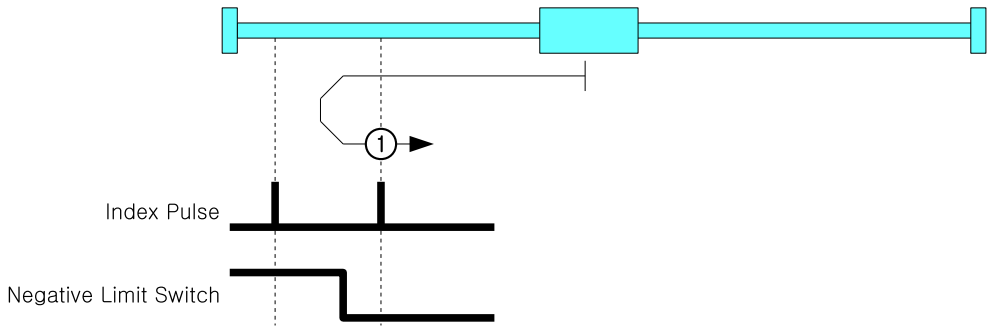

Figure 4.10: Homing Method 1

In this homing method, it start to move in the negative direction and the speed is Speed during search for switch (6099h, Sub-Index 1), until Negative Limit Switch is detected.
When a Negative Limit Switch is detected, it moves out of the Limit Switch at the speed of Speed during search for zero (6099h, Sub-Index 2) in the positive direction and moves in the opposite direction to detect the Limit Switch again.
Then, it moves in the positive direction until Index Pulse is detected, and sets that position as sensor origin position.

Method 2: Homing on Positive Limit Switch and Index Pulse

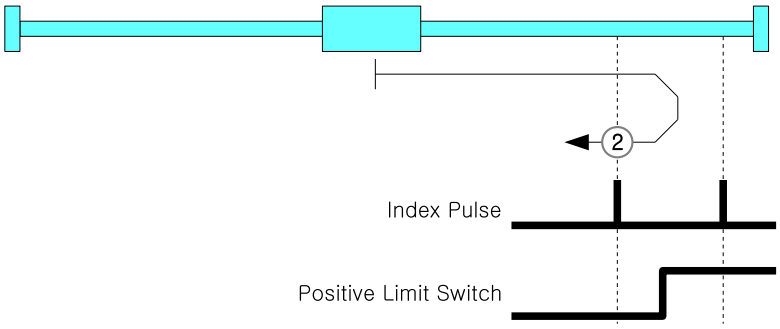

Figure 4.11: Homing Method 2

In this homing method, it start to move in the positive direction and the speed is Speed during search for switch (6099h, Sub-Index 1), until Positive Limit Switch is detected.
When a Positive Limit Switch is detected, it moves out of the Limit Switch at the speed of Speed during search for zero (6099h, Sub-Index 2) in the negative direction and moves in the opposite direction to detect the Limit Switch again.
Then, it moves in the negative direction until Index Pulse is detected, and sets that position as sensor origin position.

Method 7: Homing on Origin Switch (Positive Direction, Negative Edge) and Index Pulse

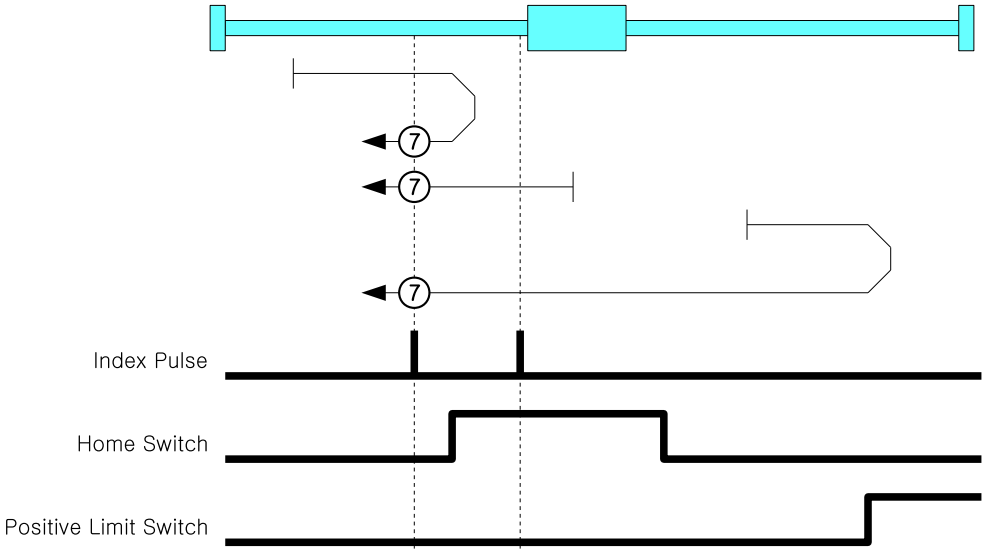

Figure 4.12: Homing Method 7

In this homing method, it start to move in the positive direction and the speed is Speed during search for switch (6099h, Sub-Index 1), until Origin Switch is detected. If a Positive Limit Switch is detected, it moves in the opposite direction until the Origin Switch is detected.
When a Origin Switch is detected, it moves out of the Origin Switch at the speed of Speed during search for zero (6099h, Sub-Index 2) in the negative direction and moves in the opposite direction to detect the Origin Switch again.
Then, it moves in the negative direction until Index Pulse is detected, and sets that position as sensor origin position.

Method 10: Homing on Origin Switch (Positive Direction, Positive Edge) and Index Pulse

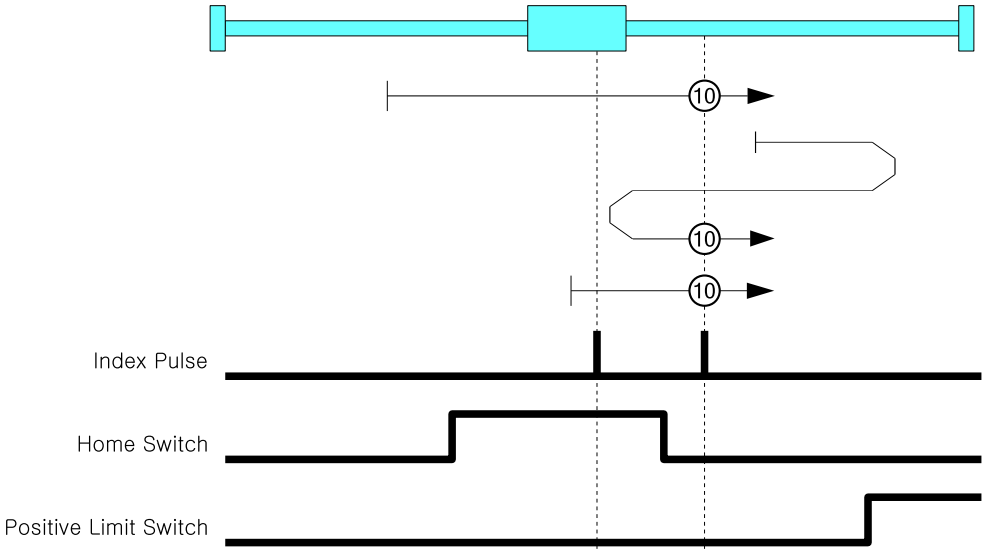

Figure 4.13: Homing Method 10

In this homing method, it start to move in the positive direction and the speed is Speed during search for switch (6099h, Sub-Index 1), until Origin Switch is detected. If a Positive Limit Switch is detected, it moves in the opposite direction until the Origin Switch is detected.
When a Origin Switch is detected, it moves out of the Origin Switch at the speed of Speed during search for zero (6099h, Sub-Index 2) in the positive direction and moves in the same direction to detect the Origin Switch again.
Then, it moves in the positive direction until Index Pulse is detected, and sets that position as sensor origin position.

Method 11: Homing on Origin Switch (Negative Direction, Positive Edge) and Index Pulse

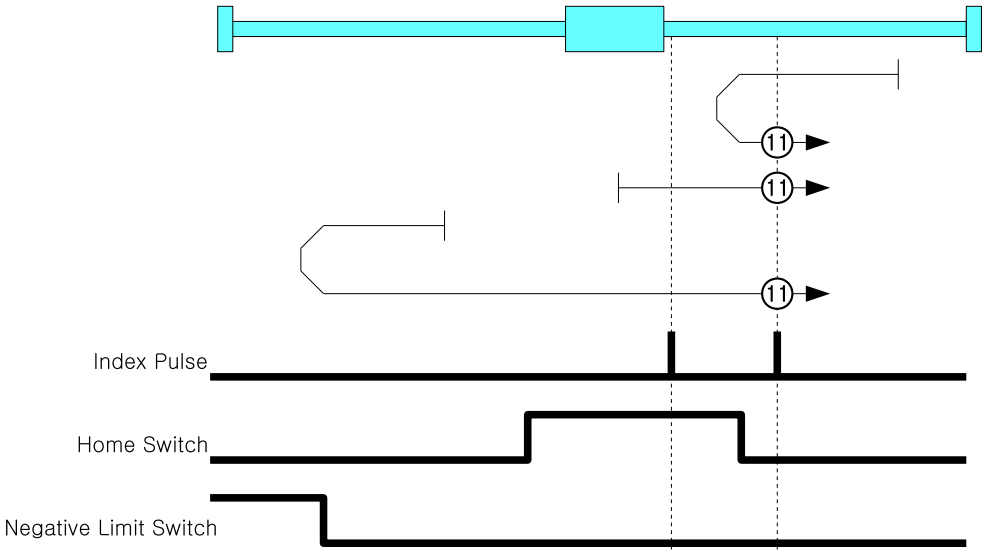

Figure 4.14: Homing Method 11

In this homing method, it start to move in the negative direction and the speed is Speed during search for switch (6099h, Sub-Index 1), until Origin Switch is detected. If a Negative Limit Switch is detected, it moves in the opposite direction until the Origin Switch is detected.

When a Origin Switch is detected, it moves out of the Origin Switch at the speed of Speed during search for zero (6099h, Sub-Index 2) in the positive direction and moves in the opposite direction to detect the Origin Switch again.
Then, it moves in the positive direction until Index Pulse is detected, and sets that position as sensor origin position.

Method 14: Homing on Origin Switch (Negative Direction, Negative Edge) and Index Pulse

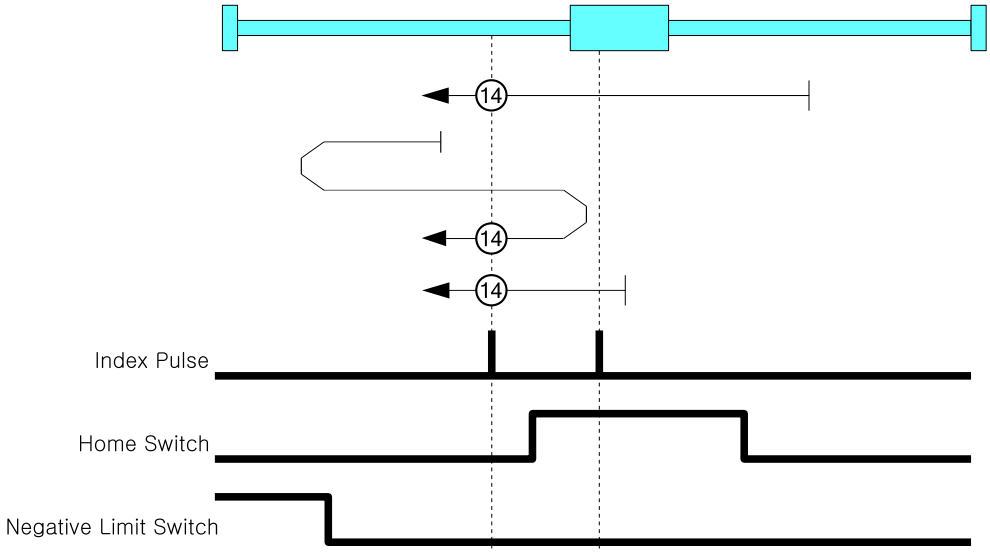

Figure 4.15: Homing Method 14

In this homing method, it start to move in the negative direction and the speed is Speed during search for switch (6099h, Sub-Index 1), until Origin Switch is detected. If a Negative Limit Switch is detected, it moves in the opposite direction until the Origin Switch is detected.
When a Origin Switch is detected, it moves out of the Origin Switch at the speed of Speed during search for zero (6099h, Sub-Index 2) in the negative direction and moves in the same direction to detect the Origin Switch again.
Then, it moves in the negative direction until Index Pulse is detected, and sets that position as sensor origin position.

Method 17: Homing on Negative Limit Switch

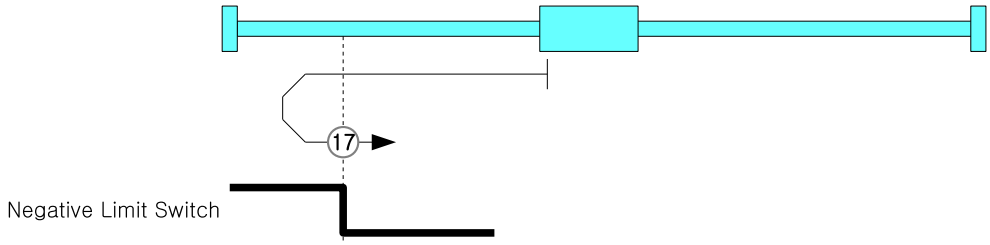

Figure 4.16: Homing Method 17

In this homing method, it start to move in the negative direction and the speed is Speed during search for switch (6099h, Sub-Index 1), until Negative Limit Switch is detected.
When a Negative Limit Switch is detected, it moves out of the Limit Switch at the speed of Speed during search for zero (6099h, Sub-Index 2) in the positive direction and moves in the opposite direction to detect the Limit Switch again.

Then, it moves in the positive direction until Index Pulse is detected, and sets that position as sensor origin position.

Method 18: Homing on Positive Limit Switch

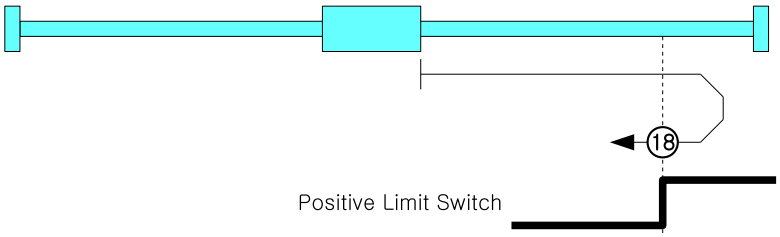

Figure 4.17: Homing Method 18

In this homing method, it start to move in the positive direction and the speed is Speed during search for switch (6099h, Sub-Index 1), until Positive Limit Switch is detected.
When a Positive Limit Switch is detected, it moves out of the Limit Switch at the speed of Speed during search for zero (6099h, Sub-Index 2) in the negative direction and moves in the opposite direction to detect the Limit Switch again.
Then, it moves in the negative direction until Index Pulse is detected, and sets that position as sensor origin position.

Method 24: Homing on Origin Switch (Positive Direction, Negative Edge)

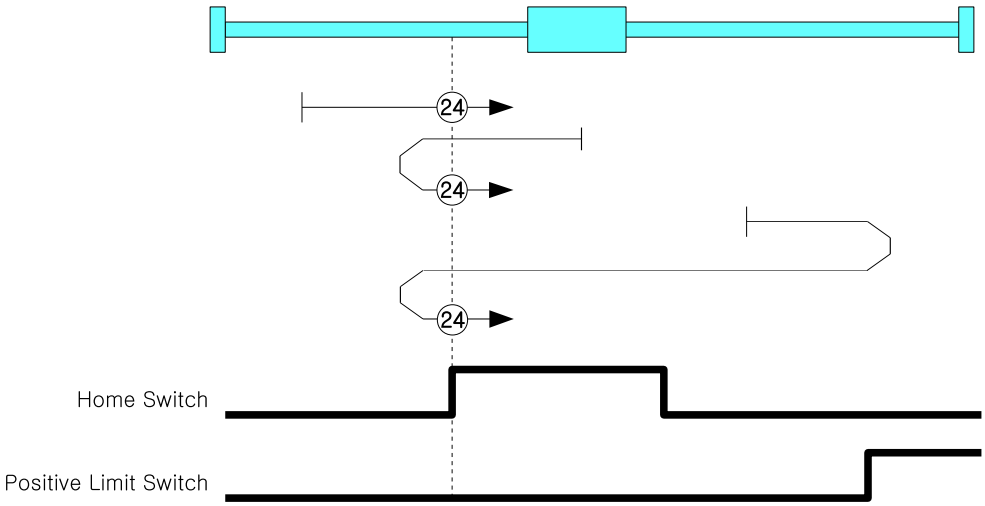

Figure 4.18: Homing Method 24

In this homing method, it start to move in the positive direction and the speed is Speed during search for switch (6099h, Sub-Index 1), until Origin Switch is detected. If a Positive Limit Switch is detected, it moves in the opposite direction until the Origin Switch is detected.
When a Origin Switch is detected, it moves out of the Origin Switch at the speed of Speed during search for zero (6099h, Sub-Index 2) in the negative direction and moves in the opposite direction to detect the Origin Switch again, and sets that position as sensor origin position.

Method 25: Homing on Origin Switch (Positive Direction, Positive Edge)

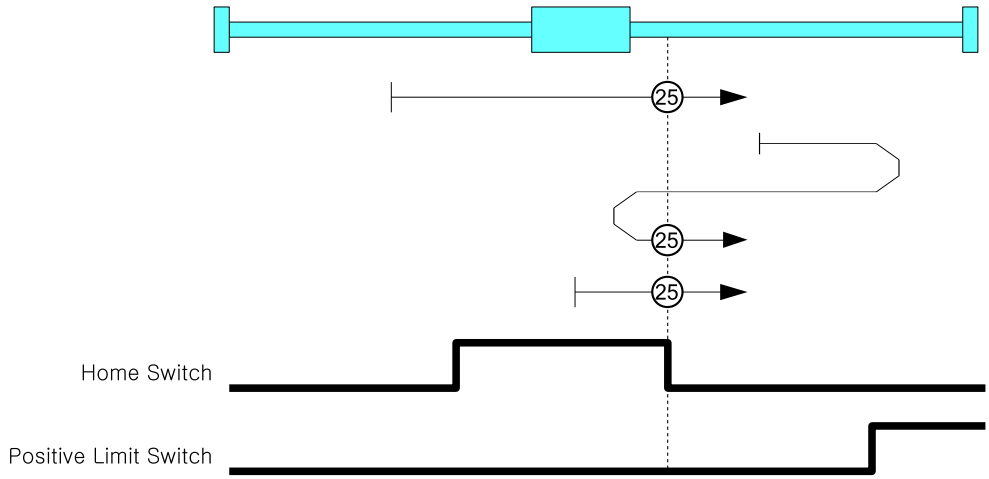

Figure 4.19: Homing Method 25

In this homing method, it start to move in the positive direction and the speed is Speed during search for switch (6099h, Sub-Index 1), until Origin Switch is detected. If a Positive Limit Switch is detected, it moves in the opposite direction until the Origin Switch is detected.
When a Origin Switch is detected, it moves out of the Origin Switch at the speed of Speed during search for zero (6099h, Sub-Index 2) in the positive direction and moves in the same direction to detect the Origin Switch again, and sets that position as sensor origin position.

Method 28: Homing on Origin Switch (Negative Direction, Positive Edge)

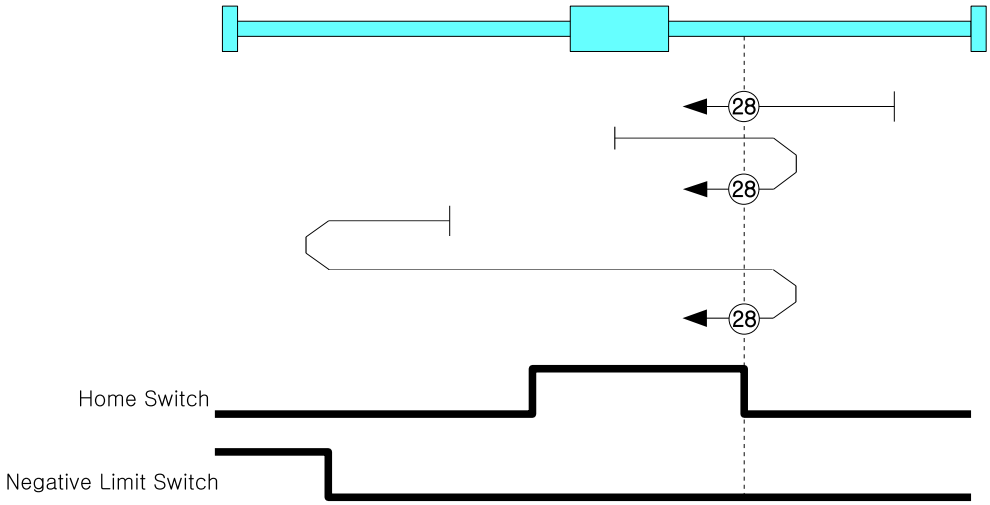

Figure 4.20: Homing Method 28

In this homing method, it start to move in the negative direction and the speed is Speed during search for switch (6099h, Sub-Index 1), until Origin Switch is detected. If a Negative Limit Switch is detected, it moves in the opposite direction until the Origin Switch is detected.
When a Origin Switch is detected, it moves out of the Origin Switch at the speed of Speed during search for zero (6099h, Sub-Index 2) in the positive direction and moves in the opposite direction to detect the Origin Switch again, and sets that position as sensor origin position.

Method 29: Homing on Origin Switch (Negative Direction, Negative Edge)

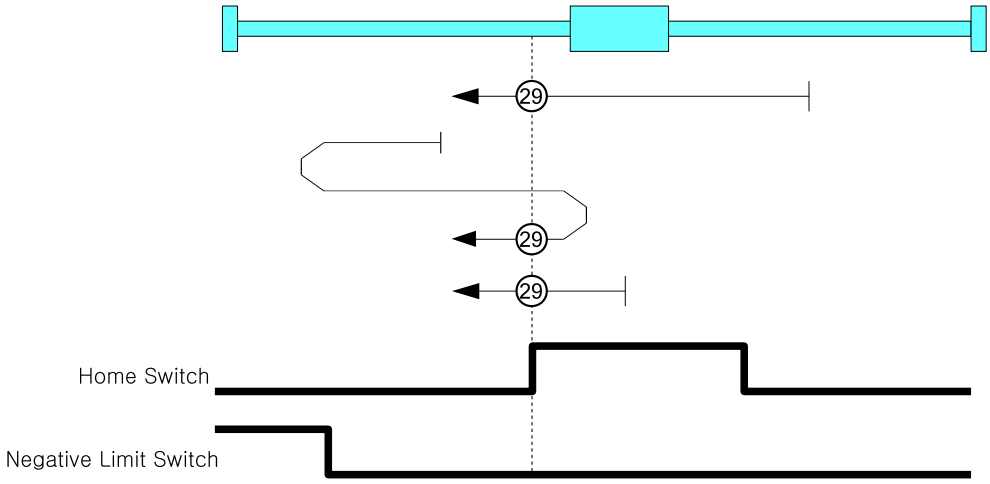

Figure 4.21: Homing Method 29

In this homing method, it start to move in the negative direction and the speed is Speed during search for switch (6099h, Sub-Index 1), until Origin Switch is detected. If a Negative Limit Switch is detected, it moves in the opposite direction until the Origin Switch is detected.
When a Origin Switch is detected, it moves out of the Origin Switch at the speed of Speed during search for zero (6099h, Sub-Index 2) in the negative direction and moves in the same direction to detect the Origin Switch again, and sets that position as sensor origin position.

Method 33, 34: Homing Index Pulse

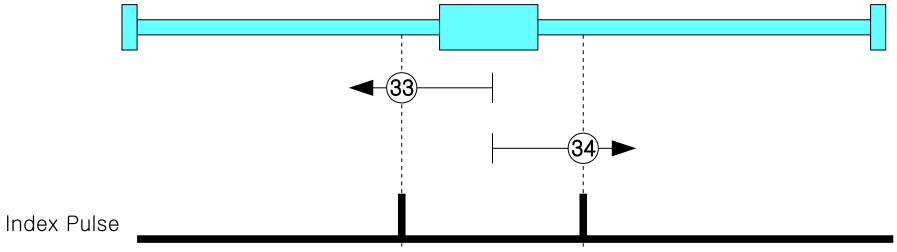

Figure 4.22: Homing Method 33

Origin search method 33 is to move from current position to negative direction, 34 is moving to positive direction and movement velocity is Speed during search for zero (6099h, Sub-Index 2). Index Pulse goes ON then stops then set correspondent position as sensor origin position.

Method 35: Set the current position origin

This origin search method is to set current position as sensor origin position.

Method 37: Set the current position origin and reset current position

This origin search method is to set current position as sensor origin position. If set value of Home offset (607Ch) is not 0, initialize current position as Home offset value.

Method -3: Homing on Negative Limit touch

This origin search method is to start toward Negative Direction and movement velocity is the value of Speed during search for zero (6099h, Sub-Index 2). If it sense certain Load then stops and set correspondent position as sensor origin position.
The level of load to be sensed is to set through Object 2014h: Homing Torque Ratio.

Method -4: Homing on Positive Limit touch

This origin search method is to start toward Positive Direction and movement velocity is the value of Speed during search for zero (6099h, Sub-Index 2). If it sense certain Load then stops and set correspondent position as sensor origin position.
The level of load to be sensed is to set through Object 2014h: Homing Torque Ratio.

Method -5: Homing on Negative Limit touch and Index Pulse

This origin search method is to start toward Positive Direction and movement velocity is the value of Speed during search for zero (6099h, Sub-Index 2). If it sense certain Load then stops and moves to opposite direction and movement velocity is Speed during search for zero (6099h, Sub-Index 2). Index Pulse goes ON then stops and set correspondent position as sensor origin position.
The level of load to be sensed is to set through Object 2014h: Homing Torque Ratio.

Method -6: Homing on Positive Limit touch and Index Pulse

This origin search method is to start toward Positive Direction and movement velocity is the value of Speed during search for zero (6099h, Sub-Index 2). If it sense certain Load then stops and moves to opposite direction and movement velocity is Speed during search for zero (6099h, Sub-Index 2). Index Pulse goes ON then stops and set correspondent position as sensor origin position.
The level of load to be sensed is to set through Object 2014h: Homing Torque Ratio.

4.7 Touch Probe

4.7.1 Definition

Touch probe function is to record current position with sensing inputs from external signal.

4.7.2 Related Objects

Object	Description
Touch probe function (60B8h)	Control Touch Probe 1/2.
Touch probe status (60B9h)	Indicate status of Touch Probe 1/2.
Touch probe 1 positive value (60BAh)	Indicate detected position of Rising edge of Touch Probe 1.
Touch probe 1 negative value (60BBh)	Indicate detected position of Falling edge of Touch Probe 1.
Touch probe 2 positive value (60BCh)	Indicate detected position of Rising edge of Touch Probe 2.
Touch probe 2 negative value (60BDh)	Indicate detected position of Falling edge of Touch Probe 2.
Touch probe 1 positive edge counter (60D5h)	Indicate the number of times the Rising edge of Touch Probe 1 was detected.
Touch probe 1 negative edge counter (60D6h)	Indicate the number of times the Falling edge of Touch Probe 1 was detected.
Touch probe 2 positive edge counter (60D7h)	Indicate the number of times the Rising edge of Touch Probe 2 was detected.
Touch probe 2 negative edge counter (60D8h)	Indicate the number of times the Falling edge of Touch Probe 1 was detected.
Touch probe source (60D0h)	Select input signal of Touch Probe 1/2.

Table 4.23: Touch Probe related Objects

4.7.3 Touch Probe Status and Control

Touch Probe Operation : Acknowledge initial signal

If Touch probe function of bit number 1, 9 has set as O, Touch probe only uses initially acknowledged signal after Enable.
Please refer to Timing chart as follow.

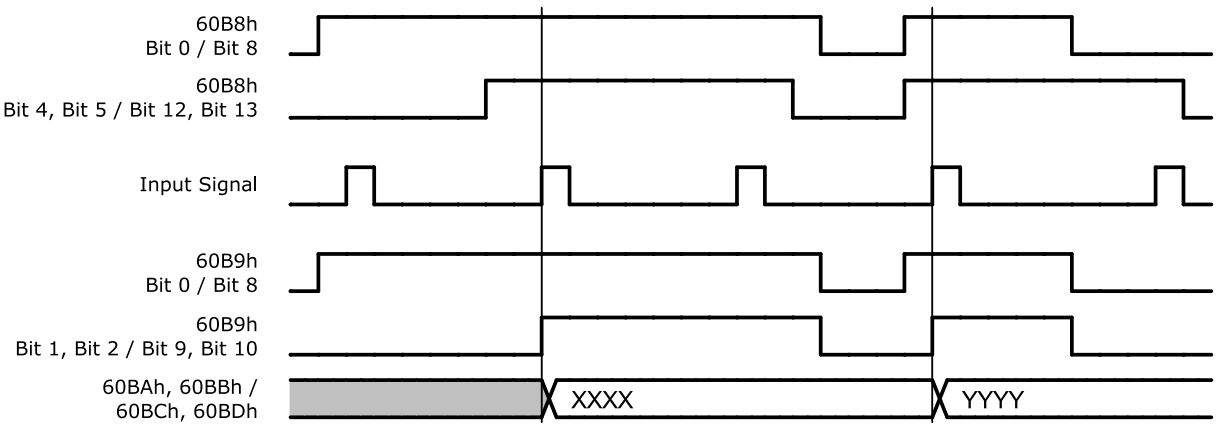

Figure 4.23: Touch Probe Operation (Bit 1 / Bit 9 = 0)

Able to check whether input signal acknowledged through Touch probe status of bit number 1 ∼ 2, 9 ∼ 10 (Detected).
Acknowledged position value, please check Touch probe 1 positive value, Touch probe 2 positive value, Touch probe 1 negative value, Touch probe 2 negative value.

Touch Probe Operation : Continuous signal acknowledgement

If Touch probe function of bit number 1, 9 has set as 1, Touch probe uses all acknowledged signals after Enable.
Please refer to Timing chart as follows.

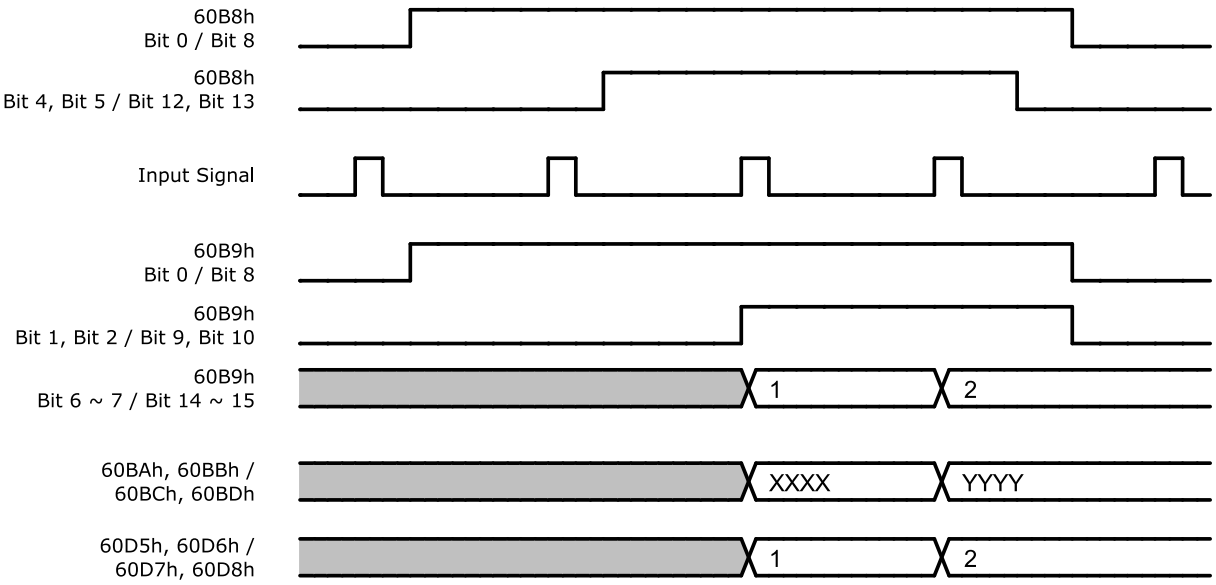

Figure 4.24: Touch Probe Operation (Bit 1 / Bit 9 = 1)

Touch probe status of bit number 6 ~ 7, 14 ~ 15 (Counter) value increases every single of input signal acknowledgement. (Range of this value is 0 ~ 3.)
For the count of input signal acknowledgement, please check Touch probe 1 positive edge counter, Touch probe 2 positive edge counter, Touch probe 1 negative edge counter, Touch probe 2 negative edge counter.

4.8 Digital Input and Output

4.8.1 Definition

Ezi-SERVOII EtherCAT 4X provides 3 default input (ORIGIN, LIMIT+, LIMIT-) and also 1 default output (BRAKE).

4.8.2 Related Objects

Object	Access	Description
Object 60FDh: Digital inputs	RO	Indicates input signals.
Object 60FEh: Digital outputs Sub-Index 1 - Physical Outputs Sub-Index 2 - Bit Mask	 R/W R/W	 Set output signals. Set output signals.
Object 2001h: Sensors logics	R/W	Set Active Level of ORIGIN, LIMIT+, LIMIT- input signals.
Object 2002h: Reverse limit direction	R/W	Exchange LIMIT+ and LIMIT- input signals.
Object 2010h: Brake delay	R/W	Set Delay at BRAKE output.

Table 4.24: I/O related Objects

4.8.3 ORIGIN and LIMIT Input

Active Level of ORIGIN and LIMIT input signal can be changed through Sensors logics (2001h) of Bit 0, 1. Please refer to Sensors logics.
LIMIT+ and LIMIT- input signals can be exchanged through Reverse limit direction (2002h). Interrelation between Reverse limit direction (2002h) and LIMIT+, LIMIT- is as follows.

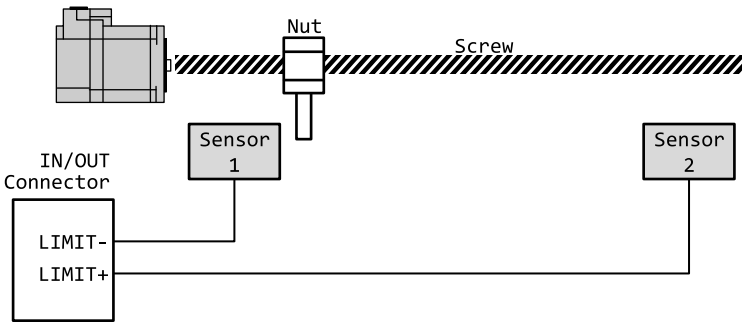

Reverse Limit Direction	Sensor 1 Detect	Sensor 2 Detect
0	Negative Limit	Positive Limit
1	Positive Limit	Negative Limit

Table 4.25: Relationship between Reverse limit direction (2002h) and Limit Sensor

4.8.4 BRAKE Output

BRAKE output signal activates according to Operation Enabled of Status word (6041h).
Timing of BRAKE ON can be set by Brake delay (2010h).

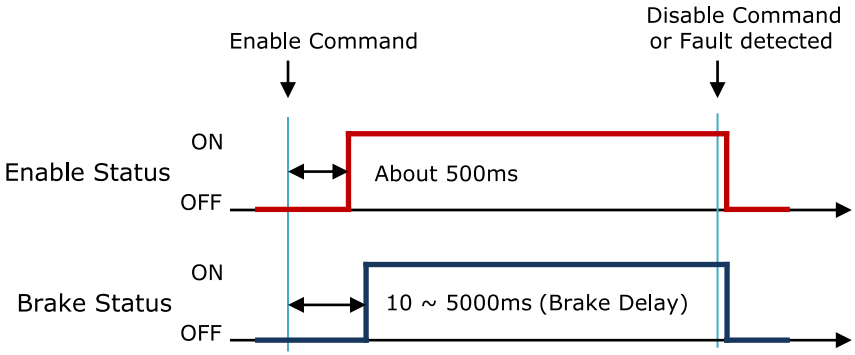

Figure 4.25: Brake Signal

BRAKE output can be manually released through Digital outputs (60FEh) Bit 0:Set Brake. For more detail information, please refer to 6.5.43 Object 60FEh: Digital outputs.

Chapter 5

Operation

5.1 Operation Sequence

Sequence of controller operation is as follow. Exampled operation sequence of Profile Position Mode listed at the table as below..

Step	Name		Action
1	Setting	Installation	Install motor/controller according to conditions of installation.
2		Wiring	Check power cable, motor/encoder cable, I/O cable, EtherCAT communication cables are properly connected.
3		Input power	Turn power on. Check controller status.
4		PDO Mapping	Set Module/PDO Mapping.
5		Set communication status	Change EtherCAT State Machine as 'Operational'
6	Operation	Control Drive Status	Set Control Word then change Drive State Machine to Operation Enabled.
7		Set Mode	Set Object 6060h: Mode of operation.
8		Set Operation	Input value into Object needed for execution of Motion.
9		Movement Command	Execute command by setting of Control word.
10		Check Status	Check the status of Motion execution.
11	Set Drive		Reset object if need.

5.2 Setting

5.2.1 Installation

Install motor/controller according to conditions of installation. Check operation in advance under unload status and recommend to connect Load. Please refer to 2.1 Precautions of Installation

5.2.2 Wiring

Check power cable, motor/encoder cable, I/O cable, EtherCAT communication cables are properly connected. Please refer to 2.2 System Configuration

5.2.3 Input Power

Turn power onto controller and check followings.

- Check Power LED (Red Color) of Drive status LED lights.
- Check 7-Segment indicates 0 or other value.

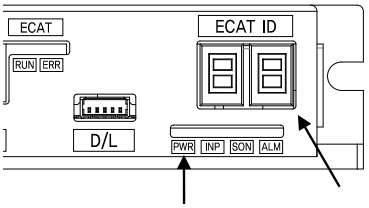

5.2.4 PDO Mapping

Set Module and PDO Mapping by setting function of Master.

Information

Trial operation explains operation by Profile Position Mode.
Select the Module: 'Axis (Normal) : dynamic select operation mode'.
Name of Module can be differentiated by each Master.

5.2.5 Set Communication Status

Change EtherCAT State Machine as ‘Operational’ status by controlling Master.

- Check State Machine of Master can be changing to ‘Operational’ status.
- Check State Machine of Controller can be changing to ‘Operational’ status.

5.3 Operation

5.3.1 Drive Status Control

Change Drive State Machine as ‘Operation Enabled’ by setting of Control word (6040h).

- Check Status word (6041h) whether it can be changing to ‘Operation Enabled’.
- In case of changing to ‘Fault’ status, check type of error by Error code (603Fh). Execute appropriate action according to type of error.

5.3.2 Set Mode

Set Mode of operation (6060h) according to operation mode will be used.

Information

Trial operation explains operation by Profile Position Mode.
Set Mode of operation (6060h) at 1.

- Check Mode of operation display (6061h) whether it has properly changed.

5.3.3 Set Operation

Set Objects according to Motion will be executed.

Information

Trial operation explains operation by Profile Position Mode.
Input 10000 at Target position (607Ah).
Input 1000 at Profile velocity (6081h).

5.3.4 Movement Command

Once setting of Motion related Object has completed, execute movement command by setting of Control word.

Information

Trial operation explains operation by Profile Position Mode.
Input 005Fh at Control word. This command is to rotate motor by setting value(distance) at Target position.

5.3.5 Check Statues

Check motor operates according to command or whether fault generated.

- Check motor achieves set operation visually.
- Check noise or abnormal vibration from motor during operation.
- After completion of motor operation, check Status word whether ‘Target Reached’ shown as 1.
- Check Status word whether ‘Fault’ shown as 1. If so, check Error code and execute appropriate action.

5.4 Drive Setting Adjustment

5.4.1 Change Rotation Direction

If rotation direction of motor goes opposite direction, set Polarity (607Eh) value then able to change rotation direction of motor.

Reverse limit direction

After changing Polarity, if LIMIT+, LIMIT- input signal acknowledgement reversed, able to change input value of 2 signals by setting the value of Reverse limit direction (2002h).
Regarding relationship between Reverse limit direction and Limit Sensors, please refer to 4.8.4 BRAKE Output.

5.4.2 Change I/O Signal Level

LIMIT+, LIMIT-, ORIGIN Input Signal

If Active Level of LIMIT+, LIMIT-, ORIGIN input signal has set different from actual connection, indication value of Actual signal input and Digital inputs can be different.
Reset Active Level of signals by setting the value of Sensors logics (2001h).
Able to set Active Level of Origin signal by Sensors logics.

Chapter 6

EtherCAT Object Dictionary

6.1 Indication Type of Objects

Following table explains indication type of information for each object.

Index	Sub index	Name	Type	Access	SAVE	PDO Mapping	Value Range	Default Value
60C2h	0	Number of entries	U8	RO	No	No		2
	1	Interpolation time period value	U8	RW	Yes	No	0 ∼ 255	2
	2	Interpolation time index	I8	RW	Yes	No	-4 ∼ 1	-3

Object indicates default information as like Device name (1008h), it is indicated as following type.

Index	Sub index	Name	Type	Access	Constant Value
1008h	0	Device name	STR(18)	RO	Ezi-SERVOII EtherCAT 4X

6.1.1 Index and Sub-Index

All object divides into 4 digits of hexadecimal index and configured as following field.

Index	Field	Description
1000h ∼ 1FFFh	Communication profile area	Objects that sets EtherCAT communication related settings or diplay status or information.
2000h ∼ 5FFFh	Manufacture specific area	FASTECH only Objects.
6000h ∼ 9FFFh	Standardized Device Profile Area	Objects defined in the CiA402 Drive Profile.

Table 6.1: Index Table of Objects

If various parameter combined at the one object, able to access through Sub-Index. Please refer to each object of Sub-Index 0 : 'Number of entries' for Max. accessible Sub-Index.

6.1.2 Name

Describes correspondent object.

6.1.3 Data Type

Parameter type of object is as follows.

Data Type	Length	Range
U8	1 byte	0 ∼ 255
U16	2 byte	0 ∼ 65535
U32	4 byte	0 ∼ 4294967295
I8	1 byte	-128 ∼ 127
I16	2 byte	-32768 ∼ 32767
I32	4 byte	-2147483648 ∼ 2147483647
BOOL	1 bit	0 ∼ 1
STR(n)		Character string which length is n

Table 6.2: Data Type

6.1.4 Access

Property of each object is as following and describes authority to access each object.

Access	Description
RO	Read Only / Parameter only can be read.
RW	Read/Write / Parameter can be read or written.

Table 6.3: Access type of object

6.1.5 SAVE

Value of object can be saved at EEPROM through Store parameters (1010h).

6.1.6 PDO Mapping

Indicates object whether correspondent object can be mapping at PDO communication of EtherCAT.

PDO Type	Description
No	Object can not be mapping at PDO.
TxPDO	Object can be mapping at TxPDO.
RxPDO	Object can be mapping at RxPDO.

Table 6.4: PDO Mapping Description

6.1.7 Constant Value

Default value what correspondent object indicates. correspondent value can be differentially indicated by model or version of product.

6.1.8 Value Range

Value Range indicates input range of correspondent object. correspondent range can be indicated as any range or range of data type can be indicated.

6.1.9 Default Value

Indicates basic value of correspondent object. Can be initialized as a correspondent value when returns back to initial value through Restore default parameters (1011h).

6.2 Communication Object

6.2.1 Object 1000h: Device type

Index	Sub index	Name	Type	Access	Constant Value
1000h	0	Device type	U32	RO	0004 0192h

Object includes information of Device Type.

Bit	Name	Value	Description
0 ∼ 15	Device Profile Number	0192h	CiA402 Profile
16 ∼ 23	Type	04h	Stepper Driver
24 ∼ 31	Mode	00h	

Table 6.5: Device Type

6.2.2 Object 1001h: Error register

Index	Sub index	Name	Type	Access	SAVE	PDO Mapping	Value Range	Default Value
1001h	0	Error register	U8	RO	No	No		00h

This object indicates type of error generated from the controller.

Bit 7	Bit 6	Bit 5	Bit 4	Bit 3	Bit 2	Bit 1	Bit 0
Manufacture specific	-	Device profile specific	Communication error	Temperature error	Voltage error	Current error	Generic error

Table 6.6: Error register

correspondent bit can be set if correspondent error generated. ‘General Error’ always goes to be set once bit error generated.

6.2.3 Object 1008h: Device name

Index	Sub index	Name	Type	Access	Constant Value
1008h	0	Device name	STR(18)	RO	Ezi-SERVOII EtherCAT 4X

This object indicates name of device.

Information

The value of Device name can be differentially indicated by product model.

6.2.4 Object 1009h: Hardware version

Index	Sub index	Name	Type	Access	Constant Value
1009h	0	Hardware version	STR(8)	RO	01.00.00

This object indicates version of product hardware. Indicated value can be different by version of product.

6.2.5 Object 100Ah: Software version

Index	Sub index	Name	Type	Access	Constant Value
100Ah	0	Software version	STR(8)	RO	01.00.00

This object indicates version of software. Indicated value can be different by version of product.

6.2.6 Object 1010h: Store parameters

Index	Sub index	Name	Type	Access	SAVE	PDO Mapping	Value Range	Default Value
1010h	0	Number of entries	U8	RO	No	No		1
	1	Store parameters	U32	RW	No	No		

Able to save all storable object into EEPROM through this object.
Need to input ‘65766173h’ into Sub-Index 01h to store objects into EEPROM.

	MSB			LSB
ASCII	‘e’	‘v’	‘a’	‘s’
Hex	65h	76h	61h	73h

Table 6.7: Definition of Save Parameters Value

If fails to store, SDO Communication returns ‘Abort SDO Transfer (abort code: 0606 0000h)’. If inputs incorrect value, device does not store EEPROM and returns ‘Abort SDO Transfer (abort code:0800 002xh)’.
When reads Sub-Index 01h, following value will be returned.

Bit	Value	Description
0	1	Support save Parameter.
1 ∼ 31	0	-

Table 6.8: Save Parameters State

Check ‘SAVE’ part for each object.

6.2.7 Object 1011h: Restore default parameters

Index	Sub index	Name	Type	Access	SAVE	PDO Mapping	Value Range	Default Value
1011h	0	Number of entries	U8	RO	No	No		1
	1	Restore default parameters	U32	RW	No	No		

It requests to device to restore objects value back to Default value to store into EEPROM.
Need to input ‘64616F6Ch’ into Sub-Index 01h to restore objects back to original setting value.

	MSB			LSB
ASCII	‘d’	‘a’	‘o’	‘l’
Hex	64h	61h	6Fh	6Ch

Table 6.9: Definition of Restore Parameters Value

If failed to initialize, SDO communication returns ‘Abort SDO Transfer (abort code: 0606 0000h)’. If inputs incorrect value, device will not be initialized and return ‘Abort SDO Transfer (abort code: 0800002xh)’.

Information

the objects' value will be set to default after power cycle.

In case of reading Sub-Index 01h, following values will be returned.

Bit	Value	Description
0	1	Support Restore Default Parameter.
1 ∼ 31	0	-

Table 6.10: Restore Parameters State

6.2.8 Object 1018h: Identity

Index	Sub index	Name	Type	Access	Constant Value
1018h	0	Number of entries	U8	RO	4
	1	Vendor ID	U32	RO	0FA0 0000h
	2	Product code	U32	RO	0000 1002h
	3	Revision number	U32	RO	0000 0000h
	4	Serial number	U32	RO	0000 0000h

This object indicates information of device.

Information

Value for each item of Identity can be differentially indicated by product model and version.

6.2.9 Object 10F1h: Error settings

Index	Sub index	Name	Type	Access	SAVE	PDO Mapping	Value Range	Default Value
10F1h	0	Number of entries	U8	RO	No	No		2
	1	Reserved	U32	RO	No	No		1
	2	Sync error counter limit	U16	RW	No	No	0 ∼ 65535	12

Sync Error Counter Limit

This object sets the crieria for judging the failure to receive Process Data as a Communication Error when the Communication Synchronization type is DC Sync Event.
If product was not received the Process Data (SM Event does not occur) sent by the Master, 'Internal SM Event Missed Counter' increases by 3. Counter decreases by 1 when Process Data is normally received. If the counter exceeds the value set in the Sync Error Counter Limit, 'EtherCAT Communication Error (7500h)' occurs and the EtherCAT State Machine of the product is forcibly changed from OP to SAFE-OP. An example of increasing / decreasing of the 'Internal SM Event Missed Counter' is as follows when the Sync Error Counter Limit is 12:

SM Event occur	Counter (changes)
O	0 (-1)
X	3 (+3)
O	2 (-1)
X	5 (+3)
O	4 (-1)
O	3 (-1)
X	6 (+3)
X	9 (+3)
X	12 (+3) / Communication error

Table 6.11: Example of the Internal SM Event Missed Counter

6.2.10 Object 10F3h: Diagnosis history

Index	Sub index	Name	Type	Access	SAVE	PDO Mapping	Value Range	Default Value
10F3h	0	Number of entries	U8	RO	No	No	5 ~ 50	5
	1	Maximum messages	U8	RO	No	No	45	45
	2	Newest message	U8	RO	No	No	0, 6 ~ 50	0
	3	Newest acknowledged message	U8	RW	No	No	0, 6 ~ 50	0
	4	New message available	BOOL	RO	No	TxPDO	0 ~ 1	0
	5	Flags	U16	RW	No	No		00h
	6	Diagnosis message 1	REC	RO	No	No		
	7	Diagnosis message 2	REC	RO	No	No		
		.						
	50	Diagnosis message 45	REC	RO	No	No		

This object display the diagnosis messages that occurs inside the product.

Information

The objects of Diagnosis history are saved automatically and ar not clear even when the product is turn off.
And, does not initialized by the command of Restore default parameters.

Maximum Messages

This object displays the maximum number of diagnosis messages supported by the product.

Newest Message

This object displays the Sub-Index number of the recently added diagnosis message. When a new diagnosis message occurs, Newest Message is incremented by 1, and the content of the diagnosis message is recorded in the 'Sub-Index' position.
The value of this object increases from 6, up to 50. At 50, when new diagnosis messages occur again, it increases again from 6. (i.e., if more than 45 diagnosis messages are generated, only 45 diagnosis messages remain and the oldest messages are erased.)

Newest Acknowledged Message

This object can set whether the diagnosis messages have been acknowledged.
By setting a number of 6 ~ 50 in this object, you can mark that you have checked the diagnosis message for that Sub-Index. However, if the number of unchecked diagnosis messages exceeds 45, the value of this object is initialized to 0 by itself.

You can set value to 0 to delete all diagnosis messages. Then, the values of all objects in Diagnosis history are initialized to their default values.

New Message Available

It displayed 1 when there are any not acknowledged diagnosis messages. It displayed 0 when all diagnosis messages are acknowledged by setting the Sub-Index value of the last diagnosis message in the Newest Acknowledged Message object.

Flags

Bit 15	Bit 14	Bit 13	Bit 12	Bit 11	Bit 10	Bit 9	Bit 8
-	-	-	-	-	-	-	-
Bit 7	Bit 6	Bit 5	Bit 4	Bit 3	Bit 2	Bit 1	Bit 0
-	-	Overwrite / Discard	Operation Mode	Disable Error Message	Disable Warning Message	Disable Info Message	-

Table 6.12: Definition of Flags

- If the Disable Info Message bit is set to 1, no more 'Info' type of diagnosis messages are added.
- If the Warning Info Message bit is set to 1, no more 'Warning' type of diagnosis messages are added.
- If the Error Info Message bit is set to 1, no more 'Error' type of diagnosis messages are added.
- The Operation Mode bit sets how messages are stacked. 0 is Overwrite mode. The oldest message are Overwritten when more than 45 messages occur. 1 is Acknowledge mode. unacknowledged messages are not overwritten.
- The Overwrite / Discard bit is read-only. If the Operation Mode is Overwrite mode, this bit indicates that an unacknowledged message has been overwirtten because more than 45 new messages have occurred. If the Operation Mode is Acknowledge mode, this bit indicated that there are 45 unacknowledged messages and the newly created messages were discarded.

Diagnosis Messages 1 ∼ 45

This object is the content of the diagnosis message. it's a struct type, and it is as follows:

Byte offset	Size	Name	Description
0	4 bytes	Diag Code	Code of the Diagnosis Message.
4	1 byte	Flags (type)	Type of message. 0 is Info, 1 is Warning, 2 is Error.
5	1 byte	Flags (Param no.)	The number of 'Flags' and 'Parameter' below.
6	2 bytes	Text ID	Text ID of the message. Please refer to the DiagMessages element of the Product's ESI file.
8	8 bytes	Time Stamp	The time the message was recorded.
16	2 bytes	Flags 1	Type and size of Parameter 1. (1: BOOL, 2: INT8, 3: INT16, 4: INT32, 5: UINT8, 6: UINT16, 7: UINT32)
18	n bytes	Parameter 1	1st argument.
18 + n	2 bytes	Flags 2	Type and size of Parameter 2.
20 + n	n bytes	Parameter 2	2nd argument.
		...	

Table 6.13: The structure of Diagnosis Message

6.3 PDO Mapping Object

6.3.1 Object 1600h: RxPDO-Map 0

Index	Sub index	Name	Type	Access	SAVE	PDO Mapping	Value Range	Default Value
1600h	0	Number of entries	U8	RW	No	No	0 ~ 10	2
	1	1st PDO object	U32	RW	No	No		6040 0010h
	2	2nd PDO object	U32	RW	No	No		607A 0020h
	3	3rd PDO object	U32	RW	No	No		0000 0000h
	4	4th PDO object	U32	RW	No	No		0000 0000h
	5	5th PDO object	U32	RW	No	No		0000 0000h
	6	6th PDO object	U32	RW	No	No		0000 0000h
	7	7th PDO object	U32	RW	No	No		0000 0000h
	8	8th PDO object	U32	RW	No	No		0000 0000h
	9	9th PDO object	U32	RW	No	No		0000 0000h
	10	10th PDO object	U32	RW	No	No		0000 0000h

This object points RxPDO 0 information among RxPDO setting.
Following objects are basically mapping: Control word (6040h), Target position (607Ah)
RxPDO-Map 0 is configurable. Please refer to 3.2 PDO Mapping

6.3.2 Object 1601h: RxPDO-Map 1

Index	Sub index	Name	Type	Access	SAVE	PDO Mapping	Value Range	Default Value
1601h	0	Number of entries	U8	RW	No	No	0 ~ 10	10
	1	1st PDO object	U32	RW	No	No		6040 0010h
	2	2nd PDO object	U32	RW	No	No		607A 0020h
	3	3rd PDO object	U32	RW	No	No		6081 0020h
	4	4th PDO object	U32	RW	No	No		6060 0008h
	5	5th PDO object	U32	RW	No	No		0000 0000h
	6	6th PDO object	U32	RW	No	No		0000 0000h
	7	7th PDO object	U32	RW	No	No		0000 0000h
	8	8th PDO object	U32	RW	No	No		0000 0000h
	9	9th PDO object	U32	RW	No	No		0000 0000h
	10	10th PDO object	U32	RW	No	No		0000 0000h

This object points RxPDO 1 information among RxPDO setting. RxPDO-Map 1 is configurable. Please refer to 3.2 PDO Mapping.

6.3.3 Object 1A00h: TxPDO-Map 0

Index	Sub index	Name	Type	Access	SAVE	PDO Mapping	Value Range	Default Value
1A00h	0	Number of entries	U8	RW	No	No	0 ~ 10	2
	1	1st PDO object	U32	RW	No	No		6041 0010h
	2	2nd PDO object	U32	RW	No	No		6064 0020h
	3	3rd PDO object	U32	RW	No	No		0000 0000h
	4	4th PDO object	U32	RW	No	No		0000 0000h
	5	5th PDO object	U32	RW	No	No		0000 0000h
	6	6th PDO object	U32	RW	No	No		0000 0000h
	7	7th PDO object	U32	RW	No	No		0000 0000h
	8	8th PDO object	U32	RW	No	No		0000 0000h
	9	9th PDO object	U32	RW	No	No		0000 0000h
	10	10th PDO object	U32	RW	No	No		0000 0000h

This object points TxPDO 0 information among TxPDO setting.
Following objects are already mapping: Status word (6041h), Position actual value (6064h)
TxPDO-Map 0 is configurable. Please refer to 3.2 PDO Mapping.

6.3.4 Object 1A01h: TxPDO-Map 1

Index	Sub index	Name	Type	Access	SAVE	PDO Mapping	Value Range	Default Value
1A01h	0	Number of entries	U8	RW	No	No	0 ∼ 10	10
	1	1st PDO object	U32	RW	No	No		6041 0010h
	2	2nd PDO object	U32	RW	No	No		6064 0020h
	3	3rd PDO object	U32	RW	No	No		606C 0020h
	4	4th PDO object	U32	RW	No	No		6061 0008h
	5	5th PDO object	U32	RW	No	No		0000 0000h
	6	6th PDO object	U32	RW	No	No		0000 0000h
	7	7th PDO object	U32	RW	No	No		0000 0000h
	8	8th PDO object	U32	RW	No	No		0000 0000h
	9	9th PDO object	U32	RW	No	No		0000 0000h
	10	10th PDO object	U32	RW	No	No		0000 0000h

This object points TxPDO 1 information among TxPDO.
TxPDO-Map 1 is configurable. Please refer to 3.2 PDO Mapping.

6.3.5 Object 1C12h: RxPDO assign

Index	Sub index	Name	Type	Access	SAVE	PDO Mapping	Value Range	Default Value
1C12h	0	Number of entries	U8	RO	No	No		1
	1	RxPDO assign	U16	RW	No	No		1600h

6.3.6 Object 1C13h: TxPDO assign

Index	Sub index	Name	Type	Access	SAVE	PDO Mapping	Value Range	Default Value
1C13h	0	Number of entries	U8	RO	No	No		1
	1	TxPDO assign	U16	RW	No	No		1A00h

6.4 Sync Manager Object

6.4.1 Object 1C00h: Sync manager type

Index	Sub index	Name	Type	Access	Constant Value
1C00h	0	Number of entries	U8	RO	4
	1	SM0	U8	RO	01h
	2	SM1	U8	RO	02h
	3	SM2	U8	RO	03h
	4	SM3	U8	RO	04h

Sync Manager Type	Description
1	Mailbox Out
2	Mailbox In
3	PDO Output
4	PDO Input

Table 6.14: Sync Manager Type Value

6.4.2 Object 1C32h: SM output parameter

Index	Sub index	Name	Type	Access	SAVE	PDO Mapping	Value Range	Default Value
1C32h	0	Number of entries	U8	RO	No	No		32
	1	Synchronization type	U16	RW	No	No		0002h
	2	Cycle time	U32	RO	No	No		0000 0000h
	4	Synchronization type supported	U16	RO	No	No		401Fh
	5	Minimum cycle time	U32	RO	No	No		250000
	6	Calc and copy time	U32	RO	No	No		10000
	8	Get cycle time	U16	RW	No	No		0000h
	9	Delay time	U32	RO	No	No		0000 0000h
	10	Sync0 cycle time	U32	RW	No	No		0000 0000h
	11	SM-Event missed	U16	RO	No	No		0000h
	12	Cycle time too small	U16	RO	No	No		0000h
	32	Sync error	BOOL	RO	No	No	0 ～ 1	0

This object is to set and display current status of Sync type of SyncManager 2(SM2).

Sub index	Name	Description
1	Synchronization type	Set or display the Synchronization type of communication. 00h: Free Run mode 01h: SM2 event mode 02h: DC Sync mode
2	Cycle time	Display the Cycle time when Synchronization type is Free Run mode or SM2 event mode.
4	Synchronization types supported	Display the supported Synchronization types. bit 0: Free Run mode bit 1: SM2 event mode bit 2: DC Sync mode
5	Minimum cycle time	Display the supported minimum cycle time.
6	Calc and copy time	Display the minimum time required to perform internal operation and copy between SM2 event and Sync0 event in DC Sync mode.
8	Get cycle time	If 1 is set, Cycle time is newly measured.
9	Delay time	Not supported object. Always display 0.
10	Sync0 cycle time	Display the Cycle time when Synchronization type is DC Sync mode.
11	SM-event missed	Display the number of times that no SM2 event occurred between Sync0 events. If SM2 event does not occur, it increases by 3 and if SM2 event occurs, it decreases by 1.
12	Cycle time too small	Display the number of arrivals of the next packet before completing the previous EtherCAT packet due to the short cycle time.
32	Sync error	Display 1 when Sync Error occurs.

6.4.3 Object 1C33h: SM input parameter

Index	Sub index	Name	Type	Access	SAVE	PDO Mapping	Value Range	Default Value
1C33h	0	Number of entries	U8	RO	No	No		32
	1	Synchronization type	U16	RW	No	No		0002h
	2	Cycle time	U32	RO	No	No		0000 0000h
	4	Synchronization type supported	U16	RO	No	No		401Fh
	5	Minimum cycle time	U32	RO	No	No		250000
	6	Calc and copy time	U32	RO	No	No		10000
	8	Get cycle time	U16	RW	No	No		0000h
	9	Delay time	U32	RO	No	No		0000 0000h
	10	Sync0 cycle time	U32	RW	No	No		0000 0000h
	11	SM-Event missed	U16	RO	No	No		0000h
	12	Cycle time too small	U16	RO	No	No		0000h
	32	Sync error	BOOL	RO	No	No		0

This object is to set and display current status of Sync type of SyncManager 3(SM3).

Sub index	Name	Description
1	Synchronization type	Set or display the Synchronization type of communication. 00h: Free Run mode 01h: SM2 event mode 02h: DC Sync mode
2	Cycle time	Display the Cycle time when Synchronization type is Free Run mode or SM2 event mode.
4	Synchronization types supported	Display the supported Synchronization types. bit 0: Free Run mode bit 1: SM2 event mode bit 2: DC Sync mode
5	Minimum cycle time	Display the supported minimum cycle time.
6	Calc and copy time	Display the minimum time required to perform internal operation and copy between SM2 event and Sync0 event in DC Sync mode.
8	Get cycle time	Not supported object.
9	Delay time	Not supported object. Always display 0.
10	Sync0 cycle time	Display the Cycle time when Synchronization type is DC Sync mode.
11	SM-event missed	Always display 0.
12	Cycle time too small	Display the number of arrivals of the next packet before completing the previous EtherCAT packet due to the short cycle time.
32	Sync error	Always display 0.

6.5 Drive Profile Object

6.5.1 Object 603Fh: Error code

Index	Sub index	Name	Type	Access	SAVE	PDO Mapping	Value Range	Default Value
603Fh	0	Error code	U16	RO	No	TxPDO		0000h

This object indicates latest error value generated from controller.
Please refer to 4.2 Error Code for the value of indicated value at Error code.

6.5.2 Object 6040h: Control word

Index	Sub index	Name	Type	Access	SAVE	PDO Mapping	Value Range	Default Value
6040h	0	Control word	U16	RW	No	RxPDO		0000h

This object controls device status
Each bit of this object has a meaning as follows.

Bit 15	Bit 14	Bit 13	Bit 12	Bit 11	Bit 10	Bit 9	Bit 8
-	-	oms		-	-	-	Halt
Bit 7	Bit 6	Bit 5	Bit 4	Bit 3	Bit 2	Bit 1	Bit 0
Fault Reset	oms			Enable Operation	Quick Stop	Enable Voltage	Switch On

Table 6.15: Definition of Control word

For details, please refer to each profile description.

6.5.3 Object 6041h: Status word

Index	Sub index	Name	Type	Access	SAVE	PDO Mapping	Value Range	Default Value
6041h	0	Status word	U16	RO	No	TxPDO		0000h

This object indicates the status of controller.
Each bit of this object has a meaning as follows.

Bit 15	Bit 14	Bit 13	Bit 12	Bit 11	Bit 10	Bit 9	Bit 8
-	oms			Internal Limit Active	oms	Remote	oms
Bit 7	Bit 6	Bit 5	Bit 4	Bit 3	Bit 2	Bit 1	Bit 0
-	Switch on disabled	Quick stop	Voltage enabled	Fault	Operation enabled	Switched on	Ready to switch on

Table 6.16: Definition of Status word

For details, please refer to each profile description.

6.5.4 Object 605Ah: Quick stop option code

Index	Sub index	Name	Type	Access	SAVE	PDO Mapping	Value Range	Default Value
605Ah	0	Quick stop option code	I16	RW	Yes	No	0 ~ 2, 5, 6	2

This object sets motion of immediate stop once controller status is Quick Stop.

Value	Description
0	Torque-Disable. Motor Free
1	After decelerated stop, changes to be ‘switch On Disable’ status.
2	After quick stop, changes to be ‘Switch On Disable’ status.
5	After decelerated stop, stay in ‘Quick Stop Active’ status.
6	After quick stop, stay in ‘Quick Stop Active’ status.

Table 6.17: Quick Stop Option Code

6.5.5 Object 605Bh: Shutdown option code

Index	Sub index	Name	Type	Access	SAVE	PDO Mapping	Value Range	Default Value
605Bh	0	Shutdown option code	I16	RW	Yes	No	0 ∼ 1	0

This object is to set motion when controller goes Shutdown status.

Value	Description
0	Torque-Disable. Motor Free
1	After decelerated stop, disable Motor.

Table 6.18: Shutdown Option Code

6.5.6 Object 605Ch: Disable operation option code

Index	Sub index	Name	Type	Access	SAVE	PDO Mapping	Value Range	Default Value
605Ch	0	Disable operation option code	I16	RW	Yes	No	0 ∼ 1	1

This object is to set operation in case of deactivated operation once controller goes Disable Operation status.

Value	Description
0	Torque-Disable. Motor Free
1	After decelerated stop, disable Motor.

Table 6.19: Disable Operation Option Code

6.5.7 Object 605Dh: Halt option code

Index	Sub index	Name	Type	Access	SAVE	PDO Mapping	Value Range	Default Value
605Dh	0	Halt option code	I16	RW	Yes	No	1 ∼ 2	1

This object, Control word - bit 8: Set motion through Halt once stops command.

Value	Description
1	After decelerated stops, maintains Operation Enabled status.
2	After quick stops, maintain Operation Enabled status.

Table 6.20: Halt Option Code

6.5.8 Object 605Eh: Fault reaction option code

Index	Sub index	Name	Type	Access	SAVE	PDO Mapping	Value Range	Default Value
605Eh	0	Fault reaction option code	I16	RW	Yes	No	0 ∼ 2	2

This object is to set operation once error occurs.

Value	Description
0	Torque-Disable. Motor Free
1	Decelerated stops.
2	Quick stops.

Table 6.21: Fault Reaction Option Code

6.5.9 Object 6060h: Mode of operation

Index	Sub index	Name	Type	Access	SAVE	PDO Mapping	Value Range	Default Value
6060h	0	Mode of operation	I8	RW	No	RxPDO		0

This object is to set operation mode.

Value	Description	Abbreviation
0	Operation mode has not set	-
1	Profile Position Mode	PP
6	Homing Mode	HM
8	Cyclic Synchronous Position Mode	CSP

Table 6.22: Mode of operation value

This object indicates operation mode currently requested. Current operation mode is indicated at Mode of operation display (6061h).

6.5.10 Object 6061h: Mode of operation display

Index	Sub index	Name	Type	Access	SAVE	PDO Mapping	Value Range	Default Value
6061h	0	Mode of operation display	I8	RO	No	TxPDO		0

This object indicates current operation mode. Definition of value is same as Mode of operation (6060h).

6.5.11 Object 6062h: Position demand value

Index	Sub index	Name	Type	Access	SAVE	PDO Mapping	Value Range	Default Value
6062h	0	Position demand value	I32	RO	No	TxPDO		0

This object indicates internal command position.
This position value is real time target position delivered from STEP Motor controller part to Motor.

6.5.12 Object 6064h: Position actual value

Index	Sub index	Name	Type	Access	SAVE	PDO Mapping	Value Range	Default Value
6064h	0	Position actual value	I32	RO	No	TxPDO		0

This object indicates current position.
This position value indicates Encoder value connected to controller.

6.5.13 Object 6065h: Following error window

Index	Sub index	Name	Type	Access	SAVE	PDO Mapping	Value Range	Default Value
6065h	0	Following error window	U32	RW	Yes	No		5000

Set the range of Follow Error Value.

Information

This object can NOT be set while it's 'Operation Enabled' state. Please set after 'Operation Disable'. Please refer to 4.1 Drive Status Control.

If the value of Following error actual value is greater than the value of Following error window, 'FF03h - Position Tracking Error' or 'FF0Fh - Position Overflow Error' alarm occurs and Drive is in Fault state.

6.5.14 Object 6067h: Position window

Index	Sub index	Name	Type	Access	SAVE	PDO Mapping	Value Range	Default Value
6067h	0	Position window	U32	RW	Yes	No	0 ~ 63	0

Set the range of Positioning value.

Information

This object can NOT be set while it's 'Operation Enabled' state. Please set after 'Operation Disable'. Please refer to 4.1 Drive Status Control.

6.5.15 Object 606Bh: Velocity demand value

Index	Sub index	Name	Type	Access	SAVE	PDO Mapping	Value Range	Default Value
606Bh	0	Velocity demand value	I32	RO	No	TxPDO		0

This object indicates internal command velocity. The velocity value is a positive value when the motor rotates in the positive direction, and a negative value when the motor rotates in the negative direction.

Information

This object is supported only in Profile Position Mode and Homing Mode. 0 value is displayed in Cyclic Synchronous Position Mode.

Information

This object is supported on devices with Software version (100Ah) 02.02.26 or higher.

6.5.16 Object 606Ch: Velocity actual value

Index	Sub index	Name	Type	Access	SAVE	PDO Mapping	Value Range	Default Value
606Ch	0	Velocity actual value	I32	RO	No	TxPDO		0

This object indicates internal command velocity. The velocity value is a positive value when the motor rotates in the positive direction, and a negative value when the motor rotates in the negative direction.

Information

This object does not display current actual velocity. it displays the same value as the value of Velocity demand value.

6.5.17 Object 607Ah: Target position

Index	Sub index	Name	Type	Access	SAVE	PDO Mapping	Value Range	Default Value
607Ah	0	Target position	I32	RW	No	RxPDO	-2147483648 ~ 2147483647	0

This object sets target position under Profile Position Mode, Cyclic Synchronous Position Mode.

6.5.18 Object 607Ch: Home offset

Index	Sub index	Name	Type	Access	SAVE	PDO Mapping	Value Range	Default Value
607Ch	0	Home offset	I32	RW	Yes	No	-2147483648 ~ 2147483647	0

This object sets value of difference between sensor origin position and mechanical origin position. During Homing Mode, completes origin search by set mode at Home Method then moves by Home Offset distance. If set value is over 0, move toward +direction and less than 0, move toward -direction.

6.5.19 Object 607Dh: Software position limit

Index	Sub index	Name	Type	Access	SAVE	PDO Mapping	Value Range	Default Value
607Dh	0	Number of entries	U8	RO	No	No		2
	1	Min position range limit	I32	RW	Yes	No	-2147483648 ~ 2147483647	-2147483648
	2	Max position range limit	I32	RW	Yes	No	-2147483648 ~ 2147483647	2147483647

Absolute position range where position objects can be positioned. Controller is unable to get out of this range. If needs to move position out of this range, target position can be adjusted within range and if current position currently is out of range, Status word of 'Internal Limit Active' Bit goes SET and unable to move to correspondent direction.
Software Position Limit is based on Sensor origin. If Home Offset has set by not 0 but other value, Actual Software Position Limit needs to be used after adjustment by Home Offset.

Actual movable Min. position = Min Position Limit - Home Offset

Actual movable Max. position = Max Position Limit - Home Offset

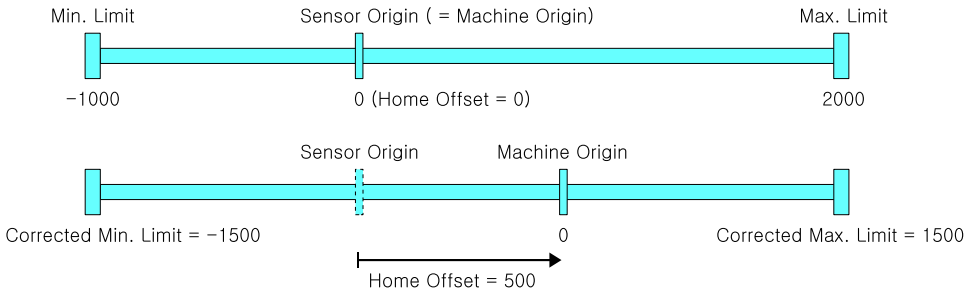

Figure 6.1: Origin Offset

Information

If you set both Min Position Range Limit and Max Position Range Limit to 0, you can disable the function of Software position limit.

6.5.20 Object 607Eh: Polarity

Index	Sub index	Name	Type	Access	SAVE	PDO Mapping	Value Range	Default Value
607Eh	0	Polarity	U8	RW	Yes	No		0

This object sets rotation direction of motor.

Bit 7	Bit 6	Bit 5	Bit 4	Bit 3	Bit 2	Bit 1	Bit 0
Position Polarity	-	-	-	-	-	-	-

Table 6.23: Polarity

Position related Objects will be multiplied by -1 when Position Polarity is 1.

6.5.21 Object 607Fh: Max profile velocity

Index	Sub index	Name	Type	Access	SAVE	PDO Mapping	Value Range	Default Value
607Fh	0	Max profile velocity	U32	RW	Yes	No	1 ~ 2500000	2500000

This object sets Max. allowable velocity.
Whatever it receives value of velocity, controller does not move faster than Max Profile Velocity.

6.5.22 Object 6081h: Profile velocity

Index	Sub index	Name	Type	Access	SAVE	PDO Mapping	Value Range	Default Value
6081h	0	Profile velocity	U32	RW	Yes	RxPDO	1 ~ 2500000	10000

This object sets movement velocity under Profile Position Mode.

6.5.23 Object 6083h: Profile acceleration

Index	Sub index	Name	Type	Access	SAVE	PDO Mapping	Value Range	Default Value
6083h	0	Profile acceleration	U32	RW	Yes	RxPDO	1000 ~ 1000000000	1000000

This object sets acceleration under Profile Position Mode.
Unit is speed of increasing per second [pulse/s^2].

6.5.24 Object 6084h: Profile deceleration

Index	Sub index	Name	Type	Access	SAVE	PDO Mapping	Value Range	Default Value
6084h	0	Profile deceleration	U32	RW	Yes	RxPDO	1000 ～ 1000000000	1000000

This object sets deceleration under Profile Position Mode.
Unit is speed of increasing per second [pulse/s^2].

6.5.25 Object 6098h: Homing method

Index	Sub index	Name	Type	Access	SAVE	PDO Mapping	Value Range	Default Value
6098h	0	Homing method	I8	RW	Yes	RxPDO		0

This object sets the method of sensor origin search under Homing Mode.
Homing Mode method is as follow.

Value	Name
0	No Mode
1	Homing on Negative Limit Switch and Index Pulse
2	Homing on Positive Limit Switch and Index Pulse
7	Homing on Origin Switch (Positive Direction, Negative Edge) and Index Pulse
10	Homing on Origin Switch (Positive Direction, Positive Edge) and Index Pulse
11	Homing on Origin Switch (Negative Direction, Positive Edge) and Index Pulse
14	Homing on Origin Switch (Negative Direction, Negative Edge) and Index Pulse
17	Homing on Negative Limit Switch
18	Homing on Positive Limit Switch
24	Homing on Origin Switch (Positive Direction, Negative Edge)
25	Homing on Origin Switch (Positive Direction, Positive Edge)
28	Homing on Origin Switch (Negative Direction, Positive Edge)
29	Homing on Origin Switch (Negative Direction, Negative Edge)
33	Homing Index Pulse (Negative Direction)
34	Homing Index Pulse (Positive Direction)
35	Set the current position origin
37	Set the current position origin and reset current position
-3	Homing on Negative Limit touch
-4	Homing on Positive Limit touch
-5	Homing on Negative Limit touch and Index Pulse
-6	Homing on Positive Limit touch and Index Pulse

Table 6.24: Origin Search Method

Please refer to origin search method for detail operation, direction and velocity of each Homing Method.

6.5.26 Object 6099h: Homing speeds

Index	Sub index	Name	Type	Access	SAVE	PDO Mapping	Value Range	Default Value
6099h	0	Number of entries	U8	RO	No	No		2
	1	Speed during search for switch	U32	RW	Yes	RxPDO	1 ∼ 2500000	5000
	2	Speed during search for zero	U32	RW	Yes	RxPDO	1 ∼ 500000	1000

This object sets values of velocity under Homing Mode.
Speed during search for switch (Sub-Index 1) is the velocity is used for correspondent Switch. Please set appropriate velocity to sense correspondent Switch.
Speed during search for zero (Sub-Index 2) is the velocity is used for searching sensor origin after searching correspondent Switch.

6.5.27 Object 609Ah: Homing acceleration

Index	Sub index	Name	Type	Access	SAVE	PDO Mapping	Value Range	Default Value
609Ah	0	Homing acceleration	U32	RW	Yes	RxPDO	1000 ∼ 1000000000	100000

This object sets Acc/Dec velocity under Homing Mode.
Unit is speed of increasing per second [pulse/s^2].

6.5.28 Object 60B8h: Touch probe function

Index	Sub index	Name	Type	Access	SAVE	PDO Mapping	Value Range	Default Value
60B8h	0	Touch probe function	U16	RW	No	RxPDO		0000h

This object sets and controls Touch Probe 1/2 operation.

Bit	Value	Description
0	0	Turn off Touch probe 1 function.
	1	Turn on Touch probe 1 function.
1	0	Sense 1st signal only.
	1	Sense signal continuously.
2 ∼ 3	0	Sense origin signal.
	1	Sense Z Phase signal.
	2	Sense signal set at 60D0h.
	3	-
4	1	Sense rising edge of signal.
5	1	Sense falling edge of signal.
6 ∼ 7	0	-
8	0	Turn off Touch probe 2 function.
	1	Turn on Touch probe 2 function.
9	0	Sense 1st signal only.
	1	Sense signal continuously.
10 ∼ 11	0	Sense origin signal.
	1	Sense Z Phase signal.
	2	Sense signal set at 60D0h.
	3	-
12	1	Sense rising edge of signal.
13	1	Sense falling edge of signal.
14 ∼ 15	0	-

6.5.29 Object 60B9h: Touch probe status

Index	Sub index	Name	Type	Access	SAVE	PDO Mapping	Value Range	Default Value
60B9h	0	Touch probe status	U16	RO	No	TxPDO		0000h

This object indicates status of Touch Probe 1/2.

Bit	Value	Description
0	0	Halt status of Touch probe 1 function.
	1	Touch probe 1 function already turn on.
1	0	Rising edge of set signal has not sensed.
	1	Rising edge of set signal has sensed.
2	0	Falling edge of set signal has not sensed.
	1	Falling edge of set signal has sensed.
3 ∼ 5	0	-
6 ∼ 7	0 ∼ 3	Indicates count of Touch probe 1 acknowledgement.
8	0	Halt status of Touch probe 2 function.
	1	Touch probe 2 function already turn on.
9	0	Rising edge of set signal has not sensed.
	1	Rising edge of set signal has sensed.
10	0	Falling edge of set signal has not sensed.
	1	Falling edge of set signal has sensed.
11 ∼ 13	0	-
14 ∼ 15	0 ∼ 3	Indicates count of Touch probe 2 acknowledgement.

Table 6.25: Definition of Touch probe status

6.5.30 Object 60BAh: Touch probe 1 positive value

Index	Sub index	Name	Type	Access	SAVE	PDO Mapping	Value Range	Default Value
60BAh	0	Touch probe 1 positive value	I32	RO	No	TxPDO		0

This object indicates encoder position value sensed by Touch Probe 1 at rising edge.

6.5.31 Object 60BBh: Touch probe 1 negative value

Index	Sub index	Name	Type	Access	SAVE	PDO Mapping	Value Range	Default Value
60BBh	0	Touch probe 1 negative value	I32	RO	No	TxPDO		0

This object indicates encoder position value sensed by Touch Probe 1 at falling edge.

6.5.32 Object 60BCh: Touch probe 2 positive value

Index	Sub index	Name	Type	Access	SAVE	PDO Mapping	Value Range	Default Value
60BCh	0	Touch probe 2 positive value	I32	RO	No	TxPDO		0

This object indicates encoder position value sensed by Touch Probe 2 at rising edge.

6.5.33 Object 60BDh: Touch probe 2 negative value

Index	Sub index	Name	Type	Access	SAVE	PDO Mapping	Value Range	Default Value
60BDh	0	Touch probe 2 negative value	I32	RO	No	TxPDO		0

This object indicates encoder position value sensed by Touch Probe 2 at falling edge.

6.5.34 Object 60C2h: Interpolation time period

Index	Sub index	Name	Type	Access	SAVE	PDO Mapping	Value Range	Default Value
60C2h	0	Number of entries	U8	RO	No	No		2
	1	Interpolation time period value	U8	RW	Yes	No	0 ∼ 255	2
	2	Interpolation time index	I8	RW	Yes	No	-4 ∼ 1	-3

This object indicates and sets cycle time using at synchronous control mode (for example : Cyclic Synchronous Position Mode)

$$\text{cycle time}[\text{sec}] = \text{Interpolation time period value} \times 10^{\text{Interpolation time index}}$$

Information

If uses DC mode for method of synchronization, cycle time ignores set value as above and automatically uses Sync0 cycle time.

6.5.35 Object 60D0h: Touch probe source

Index	Sub index	Name	Type	Access	SAVE	PDO Mapping	Value Range	Default Value
60D0h	0	Number of entries	U8	RO	No	No		2
	1	Touch probe 1 source	U16	RW	No	No		1
	2	Touch probe 2 source	U16	RW	No	No		1

If the value of Bit 2 ∼ 3, 10 ∼ 11 for Touch probe function (60B8h) as 2, uses input signal already set at this Object.

Value	Input Source
1	Origin Switch
5	Z Phase

Table 6.26: Touch probe 1 source

Value	Input Source
1	Origin Switch
5	Z Phase

Table 6.27: Touch probe 2 source

6.5.36 Object 60D5h: Touch probe 1 positive edge counter

Index	Sub index	Name	Type	Access	SAVE	PDO Mapping	Value Range	Default Value
60D5h	0	Touch probe 1 positive edge counter	U16	RO	No	TxPDO		0

This object displays the number of times the rising edge of Touch Probe 1 is detected.

6.5.37 Object 60D6h: Touch probe 1 negative edge counter

Index	Sub index	Name	Type	Access	SAVE	PDO Mapping	Value Range	Default Value
60D6h	0	Touch probe 1 negative edge counter	U16	RO	No	TxPDO		0

This object displays the number of times the falling edge of Touch Probe 1 is detected.

6.5.38 Object 60D7h: Touch probe 2 positive edge counter

Index	Sub index	Name	Type	Access	SAVE	PDO Mapping	Value Range	Default Value
60D7h	0	Touch probe 2 positive edge counter	U16	RO	No	TxPDO		0

This object displays the number of times the rising edge of Touch Probe 2 is detected.

6.5.39 Object 60D8h: Touch probe 2 negative edge counter

Index	Sub index	Name	Type	Access	SAVE	PDO Mapping	Value Range	Default Value
60D8h	0	Touch probe 2 negative edge counter	U16	RO	No	TxPDO		0

This object displays the number of times the falling edge of Touch Probe 2 is detected.

6.5.40 Object 60E3h: Supported homing methods

Index	Sub index	Name	Type	Access	Constant Value
60E3h	0	Number of entries	U8	RO	30
	1	1st supported homing method	I16	RO	1
	2	2nd supported homing method	I16	RO	2
	3	3rd supported homing method	I16	RO	7
	4	4th supported homing method	I16	RO	10
	5	5th supported homing method	I16	RO	11
	6	6th supported homing method	I16	RO	14
	7	7th supported homing method	I16	RO	17
	8	8th supported homing method	I16	RO	18
	9	9th supported homing method	I16	RO	24
	10	10th supported homing method	I16	RO	25
	11	11th supported homing method	I16	RO	28
	12	12th supported homing method	I16	RO	29
	13	13th supported homing method	I16	RO	33
	14	14th supported homing method	I16	RO	34
	15	15th supported homing method	I16	RO	35
	16	16th supported homing method	I16	RO	37
	17	17th supported homing method	I16	RO	-3
	18	18th supported homing method	I16	RO	-4
	19	19th supported homing method	I16	RO	-5
	20	20th supported homing method	I16	RO	-6
	21	21st supported homing method	I16	RO	0
	22	22nd supported homing method	I16	RO	0
		...			
	30	30th supported homing method	I16	RO	0

This object indicates lists of origin search methods supported by controller.

Information

Value of each index for Supported homing methods can be differentially indicates by product model or version.

6.5.41 Object 60F4h: Following error actual value

Index	Sub index	Name	Type	Access	SAVE	PDO Mapping	Value Range	Default Value
60F4h	0	Following error actual value	I32	RO	No	TxPDO		0

This object indicates value of position deviation.

Following error actual value = Position demand value (6062h) − Position actual value (6064h)

If the value of position deviation goes far from Following error window (6065h), Following Error will be generated.

6.5.42 Object 60FDh: Digital inputs

Index	Sub index	Name	Type	Access	SAVE	PDO Mapping	Value Range	Default Value
60FDh	0	Digital inputs	U32	RO	No	TxPDO		0000 0000h

This object indicates status of input signals.

Bit 31	Bit 30	Bit 29	Bit 28	Bit 27	Bit 26	Bit 25	Bit 24
-	-	-	-	Z Pulse	Motor Power Error	-	-
Bit 23	Bit 22	Bit 21	Bit 20	Bit 19	Bit 18	Bit 17	Bit 16
-	-	-	-	-	-	-	-
Bit 15	Bit 14	Bit 13	Bit 12	Bit 11	Bit 10	Bit 9	Bit 8
-	-	-	-	-	-	-	-
Bit 7	Bit 6	Bit 5	Bit 4	Bit 3	Bit 2	Bit 1	Bit 0
-	-	-	-	-	Origin Switch	Positive Limit Switch	Negative Limit Switch

Table 6.28: Bit definition of Digital inputs

The state of each bit is as follows:

Bit	Name	Value	Description
0	Negative Limit Switch	0	Negative Limit Switch is not detected.
		1	Negative Limit Switch is detected.
1	Positive Limit Switch	0	Positive Limit Switch is not detected.
		1	Positive Limit Switch is detected.
2	Origin Switch	0	Origin Switch is not detected.
		1	Origin Switch is detected.
26	Motor Power Error	0	Power is input to the main power connector.
		1	Power is not input to the main power connector.
27	Z Pulse	0	Encoder's Z Phase signal is not detected.
		1	Encoder's Z Phase signal is detected.

6.5.43 Object 60FEh: Digital outputs

Index	Sub index	Name	Type	Access	SAVE	PDO Mapping	Value Range	Default Value
60FEh	0	Number of entries	U8	RO	No	No		2
	1	Physical outputs	U32	RW	No	RxPDO		0000 0000h
	2	Bit mask	U32	RW	No	No		0000 0000h

Able to control User output through this Object and Brake.

Bit 31	Bit 30	Bit 29	Bit 28	Bit 27	Bit 26	Bit 25	Bit 24
-	-	-	-	-	-	-	-
Bit 23	Bit 22	Bit 21	Bit 20	Bit 19	Bit 18	Bit 17	Bit 16
-	-	-	-	-	-	-	-
Bit 15	Bit 14	Bit 13	Bit 12	Bit 11	Bit 10	Bit 9	Bit 8
-	-	-	-	-	-	-	-
Bit 7	Bit 6	Bit 5	Bit 4	Bit 3	Bit 2	Bit 1	Bit 0
-	-	-	-	-	-	-	Set Brake

Table 6.30: Definition of Physical outputs and Bit mask

Set Brake

Bit 0: Set Brake controls Brake output signal. Able to manually control Brake as set the value of Bit mask as 1.

Value	Bit mask	Physical outputs
0		Brake Release (ON)
1	Brake Manual Control	Brake Engage (OFF)

Table 6.31: Set Brake

Information

Under Operation enabled status, Brake always released (ON). Even set Bit mask as 1 and Physical output as 1, set values are ignored and Brake released.

6.5.44 Object 6502h: Supported drive modes

Index	Sub index	Name	Type	Access	Constant Value
6502h	0	Supported drive modes	U32	RO	0000 00A1h

This object indicates Operation modes currently supported.
The meaning of each bit of this object is as follows.

Bit 31	...	Bit 13	Bit 12	Bit 11	Bit 10	Bit 9	Bit 8
-	...	-	-	-	-	Cyclic Synchronous Torque Mode	Cyclic Synchronous Velocity Mode
Bit 7	Bit 6	Bit 5	Bit 4	Bit 3	Bit 2	Bit 1	Bit 0
Cyclic Synchronous Position Mode	Interpolated Position Mode	Homing Mode	-	Torque Profile Mode	Profile Velocity Mode	Velocity Mode	Profile Position Mode

Table 6.32: Supported Drive Modes

Drive supports Profile Position Mode, Homing Mode and Cyclic Synchronous Position Mode.

6.6 Manufacture specific Object

6.6.1 Object 2001h: Sensors logics

Index	Sub index	Name	Type	Access	SAVE	PDO Mapping	Value Range	Default Value
2001h	0	Sensors logics	U8	RW	Yes	No		00h

This object sets Logic of specific input signals.

Bit 7	Bit 6	Bit 5	Bit 4	Bit 3	Bit 2	Bit 1	Bit 0
-	-	-	-	-	-	Limit Switch active logic	Origin Switch active logic

Table 6.33: Sensor Logics

Value	Definition
0	Low active
1	High active

Table 6.34: Definition of Logic Value

6.6.2 Object 2002h: Reverse limit direction

Index	Sub index	Name	Type	Access	SAVE	PDO Mapping	Value Range	Default Value
2002h	0	Reverse limit direction	U8	RW	Yes	No	0 ~ 1	0

This object can set direction of Hardware Limit Switch.
It sets 1, IN/OUT connection of LIMIT+ and LIMIT- inputs will be exchanged.

Information

Please use for exchanging of LIMIT+ and LIMIT- input from IN/OUT connection when it is unable to change current wiring due to incorrect wiring of LIMIT+ and LIMIT- input signal,

6.6.3 Object 2003h: Limit stop method

Index	Sub index	Name	Type	Access	SAVE	PDO Mapping	Value Range	Default Value
2003h	0	Limit stop method	U8	RW	Yes	No	0 ∼ 4	0

This object sets the method of stop once Hardware Limit Switch goes ON.

Value	Definition (pp, hm)	Definition (csp)
0	Quick Stop	Ignore (Does not stop)
1	Decelerated Stop	Ignore (Does not stop)
2	Ignore (Does not stop)	Ignore (Does not stop)
3	Quick Stop	Quick Stop
4	Decelerated Stop	Decelerated Stop

Table 6.35: Stop Method

If the value is 0 or 1, it stops when Limit switch is detected in Profile Position Mode and Homing Mode only. it doesn't stop in Cyclic Synchronous Position Mode. If the value is 3 or 4, it stops even in Cyclic Synchronous Position Mode.

Information

The value of 3 or 4 are supported on devices with Software version (100Ah) 02.02.32 or higher.

Declaration ratio during decelerated stop follows Deceleration of correspondent operation mode. The deceleration ratio for Cyclic Synchronous Position Mode follows Object 201Bh: Limit Deceleration.

6.6.4 Object 2005h: Encoder resolution

Index	Sub index	Name	Type	Access	SAVE	PDO Mapping	Value Range	Default Value
2005h	0	Encoder resolution	U32	RO	No	No		

This object indicates Resolution of Encoder currently installed.

Information

Number of pulse to rotate 1 motor revolution follows the value of Reference resolution (200Ch).

6.6.5 Object 2006h: Start speed

Index	Sub index	Name	Type	Access	SAVE	PDO Mapping	Value Range	Default Value
2006h	0	Start speed	U16	RW	Yes	No	1 ∼ 50000	1

This object sets initial velocity of motor[pps].

6.6.6 Object 2007h: Run current

Index	Sub index	Name	Type	Access	SAVE	PDO Mapping	Value Range	Default Value
2007h	0	Run current	U8	RW	Yes	No	5 ∼ 15	10

This object sets the current value (Run current) flowing through the motor while the motor is running.

$$\text{Run current}[\%] = \text{Value} \times 10$$

Run current is set based on the rated current of the motor. For example, if you use the EzM2-42XL (rated current: 1.2[A]), the Run current is 8 (80[%]), the control current value while the motor is running is as follow.

$$\begin{aligned}\text{Control Current value}[A] &= \text{Rated Current}[A] \times \text{Run current}[\%] \\ &= 1.2 \times 80[\%] \\ &= 0.96[A]\end{aligned}$$

This value related to the torque during operation of the motor. If this value is high, torque during operation will increase. Therefore, if you think that the torque is insufficient, increase the value of this parameter to increase the torque.

Information

- If Run current value is high, the heating temperature of a motor can be increased. So please be careful.
- The maximum setting of Run current(150%) is limited to 4[A]. Therefore, a motor(56mm, 60mm) that rated current value exceeds 2.7[A] will not increase as much as the set value even if the set value is raised.
- Run current is set automatically as load. Therefore use only when torque value during running is insufficient.

Information

This object can NOT be set while it's 'Operation Enabled' state. Please set after 'Operation Disable'. Please refer to 4.1 Drive Status Control.

6.6.7 Object 2008h: Boost current

Index	Sub index	Name	Type	Access	SAVE	PDO Mapping	Value Range	Default Value
2008h	0	Boost current	U8	RW	Yes	No	0 ~ 7	0

This object sets the current value (Boost current) to be added when the motor accelerates or decelerates.

$$\text{Boost current}[\%] = \text{Value} \times 50$$

Boost current is applied propotional to the value of Run current. For example, if you use the EzM2-42XL (rated current: 1.2[A]), the Run current is 8 (80[%]) and the Boost current is 1 (50[%])), the control current value during acceleration or deceleration is as follow.

$$\begin{aligned}\text{Control Current value}[A] &= \text{Rated Current}[A] \times \text{Run current}[\%] \times (100[\%] + \text{Boost current}[\%]) \\ &= 1.2 \times 80[\%] \times (100[\%] + 50[\%]) \\ &= 1.2 \times 120[\%] \\ &= 1.44[A]\end{aligned}$$

Boost current is a setting that improves the accel./decel. characteristics by increasing the current supplied to the motor in case the accel./decel. time cannot be set sufficiently. Boost current only applies to acceleration and deceleration.

Information

- If Boost current value is high, the heating temperature of a motor can be increased. So please be careful.
- The control current is limited to 4[A] same as Run current. Therefore, a motor(56mm, 60mm) that rated current value exceeds 2.7[A] will not increase as much as the set value even if the set value is raised.

Information

This object can NOT be set while it's 'Operation Enabled' state. Please set after 'Operation Disable'. Please refer to 4.1 Drive Status Control.

6.6.8 Object 2009h: Stop current

Index	Sub index	Name	Type	Access	SAVE	PDO Mapping	Value Range	Default Value
2009h	0	Stop current	U8	RW	Yes	No	2 ~ 10	5

This object sets the Stop current when the motor is stopped and there is no load.

$$\text{Stop current}[\%] = \text{Value} \times 10$$

Stop current is applied propotional to the value of Run current. For example, if you use the EzM2-42XL (rated current: 1.2[A]), the Run current is 8 (80[%]) and the Stop current is 5 (50[%])), the control current value when the motor is stopped.

$$\begin{aligned}\text{Control Current value}[A] &= \text{Rated Current}[A] \times (\text{Run current}[\%] \times \text{Stop current}[\%]) \\ &= 1.2 \times (80[\%] \times 50[\%]) \\ &= 1.2 \times 40[\%] \\ &= 0.48[A]\end{aligned}$$

The drive adjusts the motor's drive current from Stop current to Run current according to the size of the load. This setting is used to reduce heat generation when the motor is stationary or when the load is light.

Information

If

Index	Sub index	Name	Type	Access	SAVE	PDO Mapping	Value Range	Default Value
2009h	0	Stop current	U8	RW	Yes	No	2 ~ 10	5

value is high, the heating temperature of a motor can be increased. So please be careful.

Information

This object can NOT be set while it's 'Operation Enabled' state. Please set after 'Operation Disable'. Please refer to 4.1 Drive Status Control.

6.6.9 Object 200Ah: Motor number

Index	Sub index	Name	Type	Access	SAVE	PDO Mapping	Value Range	Default Value
200Ah	0	Motor number	U16	RO	No	No		

This object indicates number of motor currently set.

6.6.10 Object 200Ch: Reference resolution

Index	Sub index	Name	Type	Access	SAVE	PDO Mapping	Value Range	Default Value
200Ch	0	Reference resolution	U32	RW	Yes	No	500 ~ 100000	10000

This object sets required number of Pulse to rotate 1 revolution of motor.

Information

Recommend to set same or lower value of Encoder resolution (2005h). In case of setting higher value than Encoder resolution, certain value of Following error can be generated.

Information

This object can NOT be set while it's 'Operation Enabled' state. Please set after 'Operation Disable'. Please refer to 4.1 Drive Status Control.

6.6.11 Object 200Dh: Position control gain

Index	Sub index	Name	Type	Access	SAVE	PDO Mapping	Value Range	Default Value
200Dh	0	Position control gain	U8	RW	Yes	No	0 ~ 63	3

This object sets Position control gain.
This is a function to adjust the positioning response according to the load mounted on the motor when the motor is stopping.
Position control gain is determined by a combination of bandwidth tuning value and gain tuning value.

$$\text{Position control gain} = \text{Bandwidth Tuning Value} \times 8 + \text{Gain Tuning Value}$$

Bandwidth Tuning Value \ Gain Tuning Value	0	1	2	3	4	5	6	7
0	0	1	2	3	4	5	6	7
1	8	9	10	11	12	13	14	15
2	16	17	18	19	20	21	22	23
3	24	25	26	27	28	29	30	31
4	32	33	34	35	36	37	38	39
5	40	41	42	43	44	45	46	47
6	48	49	50	51	52	53	54	55
7	56	57	58	59	60	61	62	63

Table 6.36: Definition of Position control gain

The bandwidth tuning value sets the mechanical bandwidth range for the inertial load and affects the stability of the system.
Smaller gain tuning value result in greater responsiveness to positional deviation, and greater overshoot / vibration. Greater gain tuning value result in smaller responsiveness to positional deviation, and smaller overshoot / vibration.
The setting procedure for these two value is as follows:

1. Set the bandwidth tuning value to ensure stable operation according to the inertia load of the motor. (Greater interia load ⇒ Greater bandwidth tuning value)
   If the bandwidth tuning value is greater, the response line become slow, so set it to the minimum to ensure stability.
2. After the bandwidth tunint value is determined, the gain tuning value is set to obtain the desired response.
   (Faster Responsiveness ⇒ Smaller gain tuning value)

Information

This object can NOT be set while it's 'Operation Enabled' state. Please set after 'Operation Disable'. Please refer to 4.1 Drive Status Control.

6.6.12 Object 200Eh: In-position mode

Index	Sub index	Name	Type	Access	SAVE	PDO Mapping	Value Range	Default Value
200Eh	0	In-position mode	U8	RW	Yes	No	0 ~ 1	0

This object sets operation mode of In-position.
In Profile Position Mode, if the position deviation from the target position is within the set value (Position Window) after the position command pulse is completed, it is judged that the positioning is completed (Target Reached).

Value	Definition
0	Fast mode
1	Accurate mode

Table 6.37: In-position mode

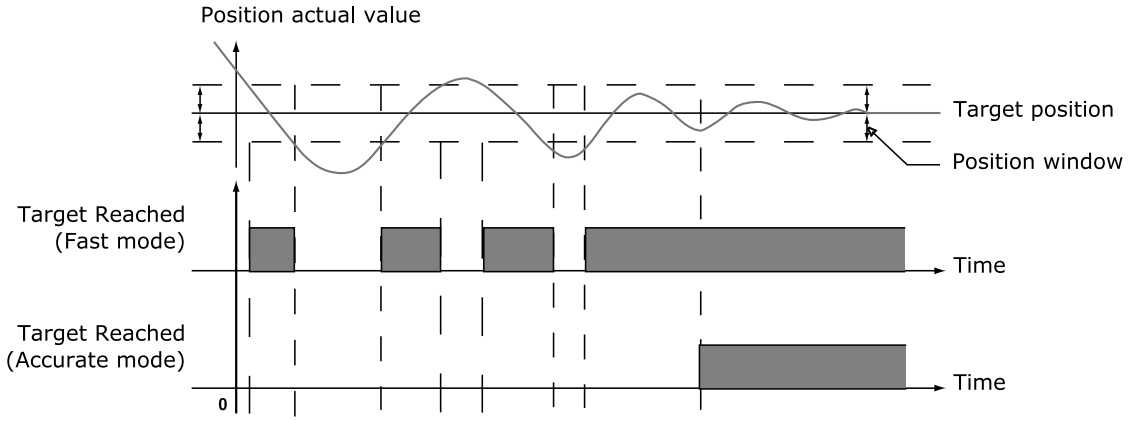

Figure 6.2: Target reached status changes according to In-position Mode

Information

This object can NOT be set while it's 'Operation Enabled' state. Please set after 'Operation Disable'. Please refer to 4.1 Drive Status Control.

6.6.13 Object 200Fh: Encoder filter time

Index	Sub index	Name	Type	Access	SAVE	PDO Mapping	Value Range	Default Value
200Fh	0	Encoder filter time	U8	RW	Yes	No	0 ~ 1	0

This object can set the Filter to the Encoder input that is input to the controller.

Value	Definition
0	Default value
1	Apply 500 ns Filter

Table 6.38: Encoder Filter Time

Information

This object can NOT be set while it's 'Operation Enabled' state. Please set after 'Operation Disable'. Please refer to 4.1 Drive Status Control.

Information

This object is supported on devices with Software version (100Ah) 02.02.23 or higher.

6.6.14 Object 2010h: Brake delay

Index	Sub index	Name	Type	Access	SAVE	PDO Mapping	Value Range	Default Value
2010h	0	Brake delay	U16	RW	Yes	No	0 ~ 1000	200

This object sets timing up to Brake release after Enable commands.

6.6.15 Object 2014h: Homing Torque Ratio

Index	Sub index	Name	Type	Access	SAVE	PDO Mapping	Value Range	Default Value
2014h	0	Homing Torque Ratio	U8	RW	Yes	No	20 ~ 90	50

This object is used in -3, -4 , -5 , -6 of Object 6098h: Homing method during the origin search operation, and set the standard load value to determine the Load sensing point. The unit is % , and proportional to Run current value of the motor .

Homing method	Name
-3	Homing on Negative Limit touch
-4	Homing on Positive Limit touch
-5	Homing on Negative Limit touch and Index Pulse
-6	Homing on Positive Limit touch and Index Pulse

Table 6.39: List of Homing methods which uses Homing Torque Ratio

6.6.16 Object 2018h: Internal Current Value

Index	Sub index	Name	Type	Access	SAVE	PDO Mapping	Value Range	Default Value
2018h	0	Internal Current Value	U16	RO	No	TxPDO	0 ~ 65535	0

This object displays the Current value of the Drive control unit. The unit of the value is mA.

Information

This object is supported on devices with Software version (100Ah) 02.02.19 or higher.

6.6.17 Object 201Ah: Push Mode

Index	Sub index	Name	Type	Access	SAVE	PDO Mapping	Value Range	Default Value
201Ah	0	Number of entries	U8	RO	No	No		2
	1	Push ratio	U8	RW	Yes	RxPDO	0 ~ 100	50
	2	Pull back distance	U32	RW	Yes	RxPDO	0 ~ 2147483647	100

This object is used in the Push Motion of Profile Position Mode.

Information

This object is supported on devices with Software version (100Ah) 02.03.37 or higher.

Push ratio

This object set the motor torque at the Push Motion and the value is the ratio of the maximum motor torque. The unit is %. If a force greater than the torque set is applied to the motor in the opposite direction of the push direction, it is determined that a work is detected.

Pull back distance

The motor can be pulled back a ceritain distance when the Push Motion is finished. The position where the motor pulls back is the position added from Position actual value by Pull back distance (in the opposite direction to the Push Motion). The unit is pulse.

6.6.18 Object 201Bh: Limit Deceleration

This object sets deceleration ratio applied in deceleration stop in Cyclic Synchronous Position Mode.

Index	Sub index	Name	Type	Access	SAVE	PDO Mapping	Value Range	Default Value
201Bh	0	Limit Deceleration	U32	RW	Yes	No	1000 ～ 1000000000	1000000

Unit is speed of increasing per second [pulse/s^2].

Information

This object is supported on devices with Software version (100Ah) 02.02.32 or higher.

6.6.19 Object 2020h: Error code history setting

Index	Sub index	Name	Type	Access	SAVE	PDO Mapping	Value Range	Default Value
2020h	0	Number of entries	U8	RO	No	No		3
	1	Function	U32	RW	No	No		0
	2	Interval for same Error Code	U32	RW	Yes	No	0 ～ 3600000	0
	3	Interval for last Error Code	U32	RW	Yes	No	0 ～ 3600000	0

This object can delete the record of Error code history or adjust the recording time.

Information

This object is supported on devices with Software version (100Ah) 02.02.23 or higher.

Function

The Function can delete the record of Error code history. If you enter '00726C63h' value in the Function, all the history in the list is initialized.

Interval for same Error Code

If the same kind of Error code occurs again within the set time, the corresponding Error code is not recorded. The unit of setting value is ms.
If the value is set to 0, all occurrences of Error code are recorded without any restrictions.

Interval for last Error Code

If an error occurs again within the set time, the corresponding Error code is not recorded. The unit of setting value is ms.
If the value is set to 0, all occurrences of Error code are recorded without any restrictions.

6.6.20 Object 2021h: Error code history

Index	Sub index	Name	Type	Access	SAVE	PDO Mapping	Value Range	Default Value
2021h	0	Number of entries	U8	RO	No	No		30
	1	Latest error code	U16	RO	No	No		0
	2	2nd latest error code	U16	RO	No	No		0
	3	3rd latest error code	U16	RO	No	No		0
	4	4th latest error code	U16	RO	No	No		0
		.						
	30	30th latest error code	U16	RO	No	No		0

Displays the most recent Error code list. The maximum number of Error code that can be stored is 30.
The list of Error code stored in Error code history will not be erased even if the controller is powered off.
Please refer to the function of Error code history setting to initialize the list of Error code history.

Information

This object is supported on devices with Software version (100Ah) 02.02.23 or higher.

6.6.21 Object 2025h: Lifetime Record

Index	Sub index	Name	Type	Access	SAVE	PDO Mapping	Value Range	Default Value
2025h	0	Number of entries	U8	RO	No	No		10
	1	LTR Operating Time	U32	RO	No	No		0
	2	LTR Enable Time	U32	RO	No	No		0
	3	LTR Rotating Count	U32	RO	No	No		0
	4	POR Operating Time	U32	RO	No	No		0
	5	POR Enable Time	U32	RO	No	No		0
	6	POR Rotating Count	U32	RO	No	No		0
	7	LTR2 Operating Time	U32	RO	No	No		0
	8	LTR2 Enable Time	U32	RO	No	No		0
	9	LTR2 Rotating Count	U32	RO	No	No		0
	10	LTR2 Function	U32	RW	No	No		0

This object shows the time the controller has operated and the distance traveled.
For example, if the controller operates as follows, each value is as follows:

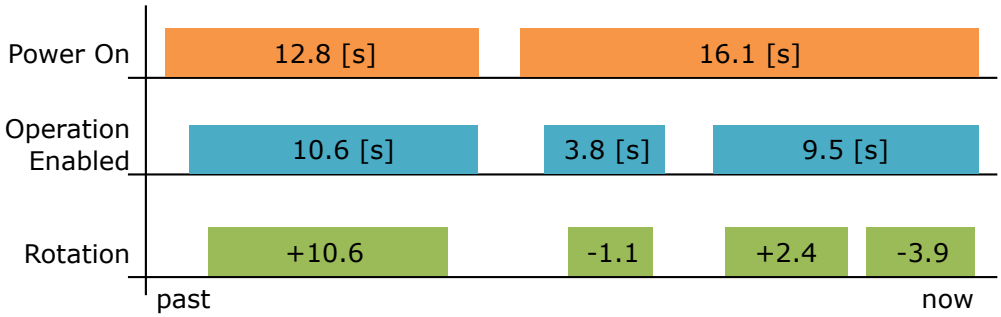

Item	Value	Details
LTR Operating Time	28 [s]	12 + 16.1 = 28.1
LTR Enable Time	23 [s]	10 + (3.8 + 9.5) = 23.3
LTR Rotating Count	17 [rev]	10 + (1.1 + 2.4 + 3.9) = 17.4
POR Operating Time	16 [s]	16.1
POR Enable Time	13 [s]	3.8 + 9.5 = 13.3
POR Rotating Count	7 [rev]	1.1 + 2.4 + 3.9 = 7.4

Table 6.40: Lifetime Record

Information

This object is supported on devices with Software version (100Ah) 02.03.36 or higher.

LTR Operating Time

It displays the total time it has been powered on and operated for a lifetime (Since the product was shipped).
The unit is [s]. Times below the decimal point are discarded when the controller is power off.

LTR Enable Time

It displays the total time it has been powered on and the drive is the Operation enabled state for a lifetime (Since the product was shipped).
The unit is [s]. Times below the decimal point are discarded when the controller is power off.

LTR Rotating Count

It displays the total number of revolutions the motor has rotated through the command for a lifetime (Since the product was shipped).
The unit is [rev] and the number of revolutions below the decimal point is discarded when the controller is power off.

POR Operating Time

It displays the time [s] that has elapsed after the controller was recently powered up.

POR Enable Time

It displays the time [s] the drive has been in Operation Enabled after the controller was recently powered up.

POR Rotating Count

It displays the number of revolutions the motor has rotated through the command after the controller was recently powered up.

LTR2 Operating Time

Same as Sub-Index 1 - LTR Operating Time, it displays the total time it has been powered on and operated. It can be initialized through the LTR2 Function.

LTR2 Enable Time

Same as Sub-Index 2 - LTR Enable Time, it displays the total time it has been powered on and the drive is the Operation enabled state. It can be initialized through the LTR2 Function.

LTR2 Rotating Count

Same as Sub-Index 3 - Rotating Count, it displays the total number of revolutions the motor has rotated through the command. It can be initialized through the LTR2 Function.

LTR2 Function

By writing 00726C63h in LTR2 Function object, LTR2 Operating Time, LTR2 Enable Time, LTR2 Rotating Count can be initialized.
When the initialization command is written, the values of the above three objects are immediately cleared to 0, and the data is accumulated again from that time.

6.6.22 Object 2030h: Advanced settings

Index	Sub index	Name	Type	Access	SAVE	PDO Mapping	Value Range	Default Value
2030h	0	Number of entries	U8	RO	No	No		5
	1	Automatic recovery from communication error	U8	RW	Yes	No	0 ～ 1	0
	2	Disable Automatic transition 2	U8	RW	Yes	No	0 ～ 1	0
	3	Config Internal Limit Active bit	U8	RW	Yes	No	0 ～ 1	0
	4	Enable Packet Delay Compensation	U8	RW	Yes	No	0 ～ 1	1
	5	Transit to Fault state when Safety activated	U8	RW	Yes	No	0 ～ 1	0

Information

This object is supported on devices with Software version (100Ah) 02.02.30 or higher.

Automatic Recovery from Communication Error

This object can set 'EtherCAT communication error (7500h)' to be clear when EtherCAT communication status is activated again. If the value is set to 1, the 'EtherCAT communication error (7500h)' is automatically cleard when the state of EtherCAT State Machine changes from Safe-Operational to Operational.

Disable Automatic transition 2

This object can set whether 'Transition 2' of Drive State Machine occurs automatically or not. If the value is set to 1, Transition 2 will not occur automatically, but rather through the 'Shutdown' command.

Information

This object is supported on devices with Software version (100Ah) 02.02.32 or higher.

Config Internal Limit Active bit

This object can change how to operate Status word - bit 11: Internal Limit Active. If the value is set to 1, the Internal Limit Active bit also displays the H/W Limit Switch status.

Information

This object is supported on devices with Software version (100Ah) 02.02.32 or higher.

Enable Packet Delay Compensation

In Cyclic Synchronous Position Mode, the EtherCAT master sends the position to which the drive should go in every cycle, and the drive moves to the position in the DC Sync Event. If the EtherCAT master sends the packet later than the DC Sync Event, the drive received the position information to go in this cycle in the next cycle. This causes the motor to repeat the action of stopping for a short time and moving at double speed. That is, the vibration of the motor occurs due to the delay of the packet.
'Enable Packet Delay Compensation' object is a function to reduce the vibration of the motor when the packet sent by the EtherCAT master is delayed in Cyclic Synchronous Position Mode. If the value is set to 1, the 'Enable Packet Delay Compensation' function is enabled.

Information

This object is supported on devices with Software version (100Ah) 02.03.48 or higher.

6.6.23 Object 2031h: Encoder count error

Index	Sub index	Name	Type	Access	SAVE	PDO Mapping	Value Range	Default Value
2031h	0	Number of entries	U8	RO	No	No		3
	1	Enable encoder count error	U8	RW	Yes	No	0 ~ 1	1
	2	Acceptable encoder count limit value	U32	RW	Yes	No	0 ~ 2147483647	28
	3	Encoder count error time out	U16	RW	Yes	No	500 ~ 10000	1000

This object can set the Error Code 'FF46h - Encoder Count Error'.

Information

This object is supported on devices with Software version (100Ah) 02.02.23 or higher.

Enable Encoder Count Error

This object can enable or disable the ’Error Code FF46h - Encoder Count Error’

Acceptable Encoder Count Limit Value

This object can set the maximum allowable position error value to judge ’Encoder Count Error’.

Encoder Count Error Time Out

This object can set the test time to judge ’Encoder Count error’.

Changelog

Date	Revision	Changes
2018-06-19	Rev.18	Initial creation.
2018-08-07	Rev.19	Update Object 606Ch: Velocity actual value. Add Object 606Bh: Velocity demand value.
2018-11-22	Rev.20	Update Object 6065h: Following error window, Object 6067h: Position window. Update 'Error Code Lists'. Add Voltage Limit of Back-EMF.
2019-02-25	Rev.21	Add Object 2030h: Advanced settings
2019-04-19	Rev.22	Update Specifications.
2019-05-30	Rev.23	Update Object 607Eh: Polarity. Fixed typo.
2019-06-05	Rev.24	Update '4.2 Error Code'.
2019-09-19	Rev.25	Update Object 6041h: Status word - Internal Limit Active. Update Object 2003h: Limit stop method. Update Object 2030h: Advanced settings. Update Object 607Dh: Software position limit. Add Object 201Bh: Limit Deceleration.
2019-12-16	Rev.26	'Z Pulse' signal added in the Object 60FDh: Digital inputs. More error codes added at the Object 603Fh: Error code.
2020-02-24	Rev.27	Add Object 2025h: Lifetime Record. Update object table in Object 10F1h: Error settings.
2020-05-14	Rev.28	Add '4.5.4.4 Push Motion (Stop Mode)' Add '4.5.4.5 Push Motion (Non-stop Mode)'
2020-07-02	Rev.30	Rename the 'Part Numbering' section to 'Model Naming' Update Model Naming.
2020-07-21	Rev.31	Add new error codes in '4.2 Error Code'. Fixed number of user input/output errors.
2020-09-15	Rev.32	Fixed a code error of 'Network Initialization Error'. Fixed Connector specification table error.
2021-02-02	Rev.33	Fixed timing chart error of '4.9 Safety Function' Fixed the default value of Object 10F1h: Error settings. Fixed the error of Current consumption value of 'Brake Signal output signal'. Update object table in Object 10F3h: Diagnosis history. Update Object 2018h: Internal Current Value. Fixed the error of the ambient temperature value in '2.1 Precautions of Installation'.
2021-08-06	Rev.34	Add USB connector descriptions. Update the terminology of the EtherCAT communication phase according to the EtherCAT standard. Update Object 2025h: Lifetime Record. Update the value table of Object 605Ah: Quick stop option code. Update the description of Object 2009h: Stop current.
2021-11-02	Rev.35	Update the description of Object 2030h: Advanced settings. Update the descriptions of Control word, Status word in '4. CiA402 Drive Profile'. Update the table of '4.2 Error Code'. Update the description of Object 10F1h: Error settings and Object 10F3h: Diagnosis history.
2022-03-08	Rev.36	Uniform hexadecimal number representation. Update the table of '4.2 Error Code'. Update the description of Object 2030h: Advanced settings.
2022-03-31	Rev.37	Update the description of Position control gain. Update the Timing chart image in the Safety Function. Update the descriptions of Object 2007h: Run current, Object 2009h: Stop current, Object 2008h: Boost current. Update the description of Object 60F4h: Following error actual value. Update the description of Object 200Fh: Encoder filter time. Update the description of Object 6040h: Control word.
2023-01-16	Rev.38	Update the description of '4.1.1 Control Word'. Fixed the Access value of Object 603Fh: Error code. Update the table of Object 60E3h: Supported homing methods. Added more homing methods in '4.6.4 Origin Search Method'. Update the description of Object 1C32h: SM output parameter. Update the description of Object 1C33h: SM input parameter.
2023-03-14	Rev.39	Update the table of '4.2 Error Code'. Added Error Code 9 - Main Power Error. Fixed the Default value of Object 60FEh: Digital outputs.
2025-01-23	Rev.40	Fixed typo

- It is prohibited to copyright or replication of the part or whole of user manual without permission.
- When user manual is needed due to damage or loss, please contact Head Quarter of Fastech or our distributors.
- The user manual can be changed without pre-notification in order to reflect improvement or change of the product specifications and for the improvement of user manual.

- Ezi-SERVOII is registered trademark of FASTECH Co., Ltd. which is registered in Korea.
- EtherCAT® is registered trademark and patented technology, licensed by Beckhoff Automation GmbH, Germany.
- Extra name of system and product on this manual is each company of brand or trademark.

FASTECH

Fast, Accurate, Smooth Motion

FASTECH Co., Ltd.
Rm#1202, 401-dong, Bucheon Techno-Park,
655, Pyeongcheon-ro, Bucheon-si Gyeonggi-do,
Republic of Korea (Zip:14502)
TEL : +82-32-234-6300 FAX : +82-32-234-6302
E-mail : fastech@fastech.co.kr
Homepage : www.fastech.co.kr

EtherCAT®

Copyright © 2014–2025 FASTECH Co., Ltd.
All Rights Reserved.
2025-01-23
Rev.40